ORDER NO. HAD 8609723C0
A6

Service Manual

Compact Disc Player

SL-P1200

SL-P1200

COMPACT disc DIGITAL AUDIO

DIGITAL

Compact Disc Player

Color	Areas
(K)	[M] ..... U.S.A.
(K)	[MC] ... Canada.
(K)	[E] ..... Switzerland and Scandinavia.
(K)	[EK] .... United Kingdom.
(K)	[XL] .... Australia.
(K)	[EG] ... F.R. Germany.
(K)	[EB] .... Belgium.
(K)	[EH] .... Holland.
(K)	[EF] .... France.
(K)	[Ei] ..... Italy.
(K)	[XA] .... Asia, Latin America, Middle Near East, Africa and Oceania.
(K)	[XB] .... Saudi Arabia.
(K)	[PA] .... East PX.
(K)	[PE] .... European Military.
(K)	[PC] .... European Audio Club.

Color

(K) ..... Black Type

SPECIFICATIONS

[*Measured by EIAJ (CP-307)]

■ Audio

No. of channels: 2 (left and right, stereo)
Frequency response: 4—20,000 Hz ±0.1 dB*
Dynamic range: More than 96 dB*
S/N ratio: More than 106 dB*
Harmonic distortion: 0.0012% (1 kHz, 0 dB)
Total harmonic distortion: 0.0025% (1 kHz, 0 dB)*
Channel separation: More than 106 dB (1 kHz)*
Channel phase balance: Less than 5°*
Wow and flutter: Below measurable limit*
Low-pass filter: High-resolution digital filter
Digital: Double over sampling 96th order FIR (Finite Impulse Response) type
Analog: GIC (Generalized Impedance Converter) active type

■ Signal Format

Sampling frequency: 44.1 kHz
Correction system: Technics Super Decoding Algorithm
D-A conversion: 16-bit linear

■ Pickup

Type: Fine-focus, one beam

FF-1

Light source: Semiconductor laser
Wavelength: 780 nm

■ Traverse system:

Type: High-speed linear access system

■ Spindle system:

Type: Brushless DD motor

■ Functions

Automatic play:
- All tracks

Direct access play:
- Direct access to any track, index, or time on disc

Program play:
- Max. of 20 program selections

Skip play:
- Forward and backward track skip
- Forward and backward program track skip

Search play:
- Forward and backward manual search
- Button search (2-speed)
- Dial search (2-speed)

Display functions:
- Music Matrix (20 tracks)
- Track number display
- Index number display
- Time display (min./sec./1/10th sec.)
- Programmed order (No.) (when recall button is pressed)
- Overflow mark (▶)
- Overflow indicator (>)
- Repeat indicator

Technics

Matsushita Services Company
50 Meadowland Parkway,
Secaucus, New Jersey 07094

Panasonic Sales Company, Division of Matsushita Electric of Puerto Rico, Inc.
Ave. 65 De Infanteria, KM 9.7
Victoria Industrial Park
Carolina, Puerto Rico 00630

Panasonic Hawaii, Inc.
91-238, Kauhi St. Ewa Beach
P.O. Box 774
Honolulu, Hawaii 96808-0774

Matsushita Electric of Canada Limited
5770 Ambler Drive, Mississauga,
Ontario, L4W 2T3

Matsushita Electric Trading Co., Ltd.
P.O. Box 288, Central Osaka Japan

Panasonic Tokyo Office
Matsushita Electric Trading Co., Ltd.
6th Floor, World Trade Center Bldg.,
No. 4-1, Hamamatsu-cho 2-Chome,
Minato-ku, Tokyo 105, Japan

- Standby indicator
- Auto cue indicator
- Time mode indicator
- Emphasis indicator

When using remote control unit:

- dB display
- Level indicator
- Music scan indicator
- Remote control indicator

■ Headphones:

Output level:	100 mW max. (variable)
Impedance:	32 Ω
Plug:	1/4 inch stereo

■ General

Power supply:	For U.S.A. and Canada: AC 60Hz, 120V For United Kingdom and Australia: AC 240V, 50Hz For Continental Europe: AC 220V, 50Hz For others: AC 110~127/220~240V, 50/60Hz
Power consumption:	29 W
Output voltage:	2 V (at 0 dB)*
Output impedance:	About 200 Ω
Load impedance:	More than 10 kΩ
Dimensions (W×D×H):	43×38×16.8 cm (16-15/16"×14-3/32"×6-5/8") When disc compartment is open. 23 cm (9-1/16") height
Weight:	14.5 kg (32 lbs)

■ Infrared remote control unit

Remote control buttons:	Basic buttons: 7 Program buttons: 12 Time mode select buttons: 2 Index button: 1 Music scan button: 1 Repeat button: 1 Asterisk button: 1 Digital volume attenuation buttons: 2
Dimensions (W×H×D):	6.4×15.5×1.8 cm
Batteries:	UM-3 "AA" batteries or IEC R6 or equivalent (1.5 V×2)
Weight:	140 g (0.3 lb.) (including batteries)

Specifications are subject to change without notice for further improvement.
Weight and dimensions are approximate.

■ CONTENTS

	Page
BEFORE USING THIS UNIT	2
PRECAUTION OF LASER DIODE	3
SAFETY PRECAUTION	3
LOCATION OF CONTROLS	4
PLAYING A DISC	7
CLEANING OF LENS	15
HANDLING PRECAUTIONS FOR OPTICAL PICKUP	15
DISASSEMBLY INSTRUCTIONS	16
RESISTORS AND CAPACITORS	21
REPLACEMENT PARTS LIST	23
EXPLODED VIEWS	27
PACKING	32
HOW TO REPLACE IC'S (Small outline type)	33
MEASUREMENTS AND ADJUSTMENTS	34
TERMINAL FUNCTION OF LSI	41
TERMINAL GUIDE OF IC'S, TRANSISTORS AND DIODES	46
PRINTED CIRCUIT BOARD AND WIRING CONNECTION DIAGRAM	47
PRINTED CIRCUIT BOARDS	49
SCHEMATIC DIAGRAM	55
BLOCK DIAGRAM	67

■ BEFORE USING THIS UNIT

1. Place a soft cloth under the unit to protect it from scratches.
2. Press the lock shaft on the bottom panel to the in (FREE) position (▮ ⇀ ▬).

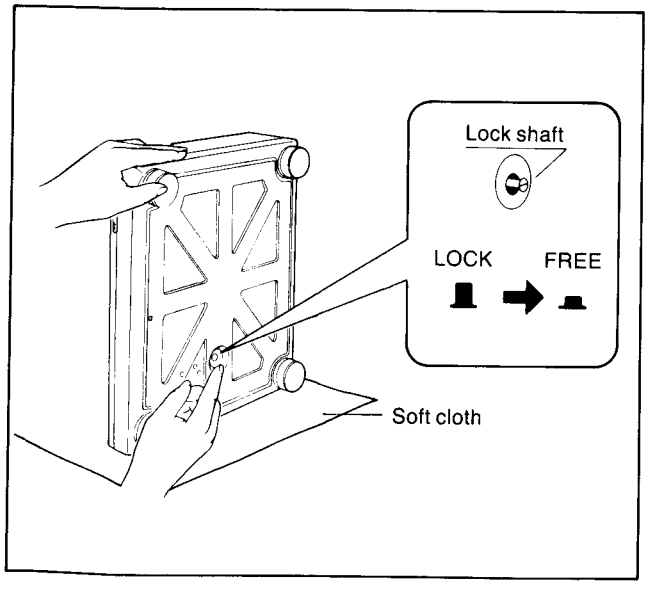

NOTE:
IF THE UNIT IS TRANSPORTED AGAIN, PERFORM THE FOLLOWING STEPS:
1) Remove the disc from the holder.
2) Pull the lock shaft to the out (LOCK) position (▬ ⇀ ▮).
CAUTION:
Do not transport the unit without locking the lock shaft.
SEVERE DAMAGE WILL RESULT.

■ PRECAUTION OF LASER DIODE

Caution: This product utilizes a laser diode.
ADVARSEL: I dette a apparat anvendes laser.

- **Use of caution labels**

Note: ○ Mark is used, × Mark is not used.

Areas	SRNZ010C01	SRNZ010S01	SRNZ010S02	SRNZ050S01
[MC]	○	×	×	×
[E], [EK], [XL], [EG], [EB], [EH], [EF], [Ei], [XA], [XB]	×	○	○	○

Rear Panel of this unit

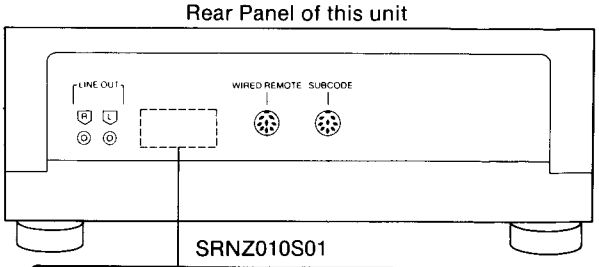

SRNZ010S01

Obs:
Apparaten innehåller laser
Komponent av höger laserklass
än klass 1.

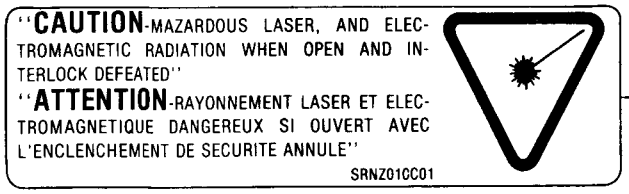

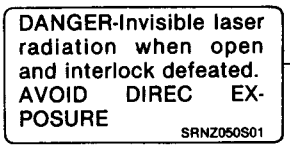

VAROITUS! Laite sisältää laserdiodin, joka lähettää näkymätöntä silmille vaarallista lasersäteilya

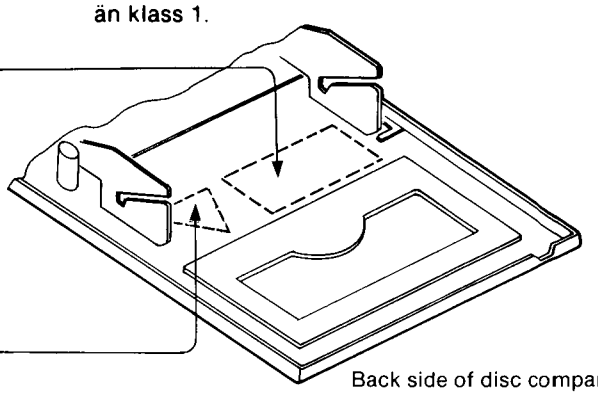

Back side of disc compartment

■ SAFETY PRECAUTION

(This "safety precaution" is applied only in U.S.A.)

1. Before servicing, unplug the power cord to prevent an electric shock.
2. When replacing parts, use only manufacturer's recommended components for safety.
3. Check the condition of the power cord. Replace if wear or damage is evident.
4. After servicing, be sure to restore the lead dress, insulation barriers, insulation papers, shields, etc.
5. Before returning the serviced equipment to the customer, be sure to make the following insulation resistance test to prevent the customer from being exposed to a shock hazard.

- **INSULATION RESISTANCE TEST**

1. Unplug the power cord and short the two prongs of the plug with a jumper wire.
2. Turn on the power switch.
3. Measure the resistance value with ohmmeter between the jumpered AC plug and each exposed metal cabinet part, such as screwheads antenna, control shafts, handle brackets, etc. Equipment with antenna terminals should read between 3MΩ and 5.2MΩ to all exposed parts. (Fig. A) Equipment without antenna terminals should read approximately infinity to all exposed parts. (Fig. B)

Note: Some exposed parts may be isolated from the chassis by design. These will read infinity.

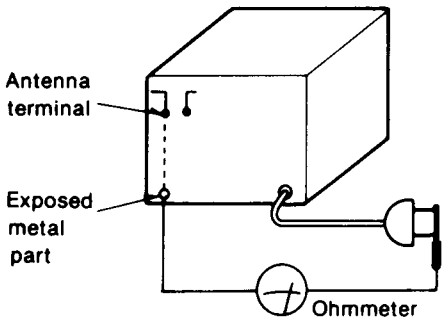

(Fig. A)
Resistance = 3MΩ—5.2MΩ

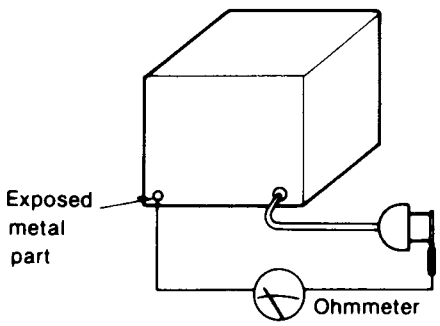

(Fig. B)
Resistance = Approx ∞

4. If the measurement is outside the specified limits, there is a possibility of a shock hazard. The equipment should be repaired and rechecked before it is returned to the customer.

■ LOCATION OF CONTROLS

Front panel

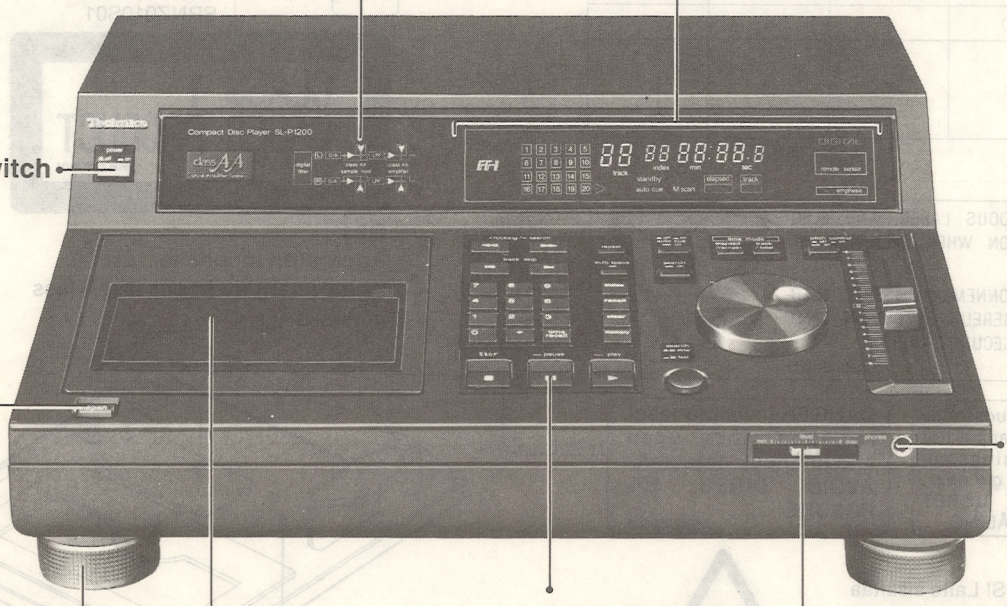

Control panel

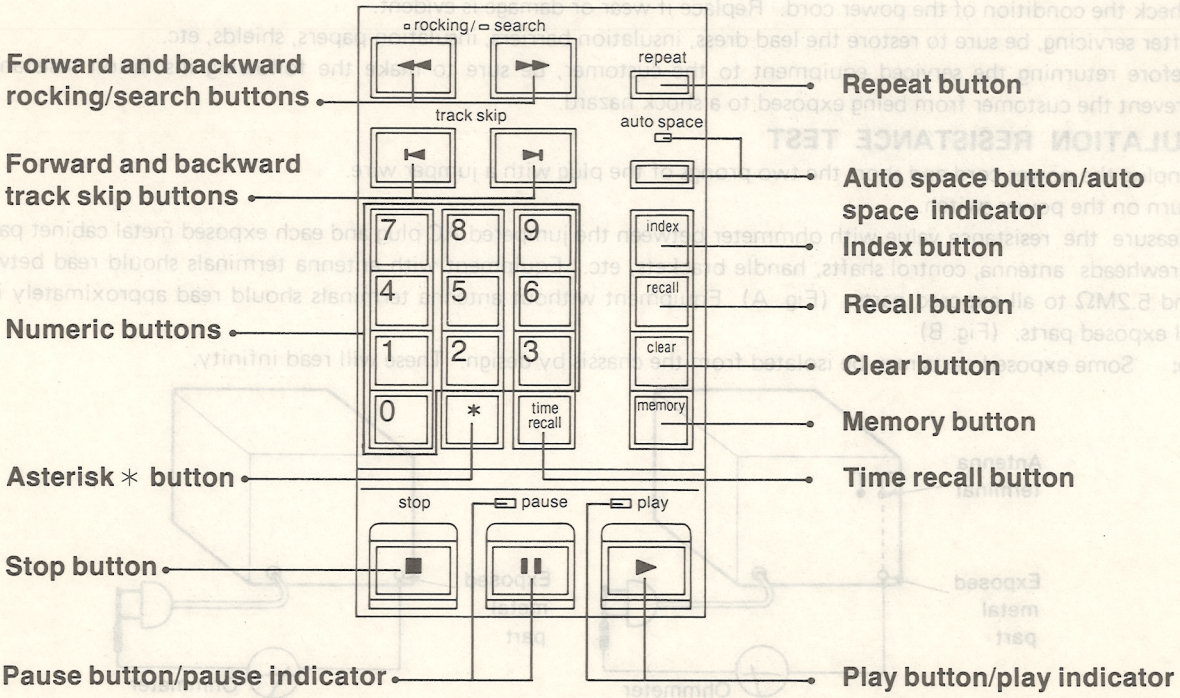

Display panel

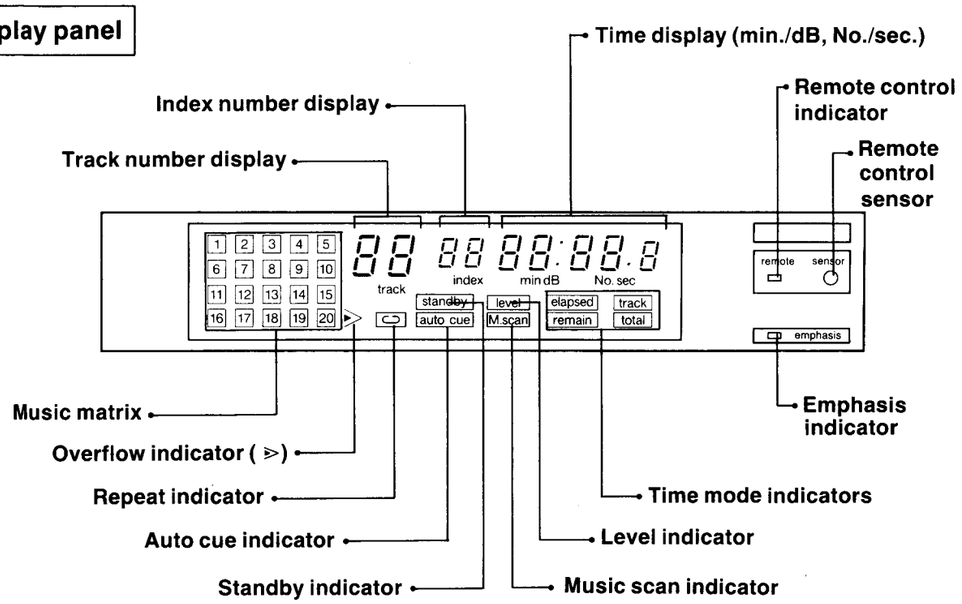

Control panel (continued)

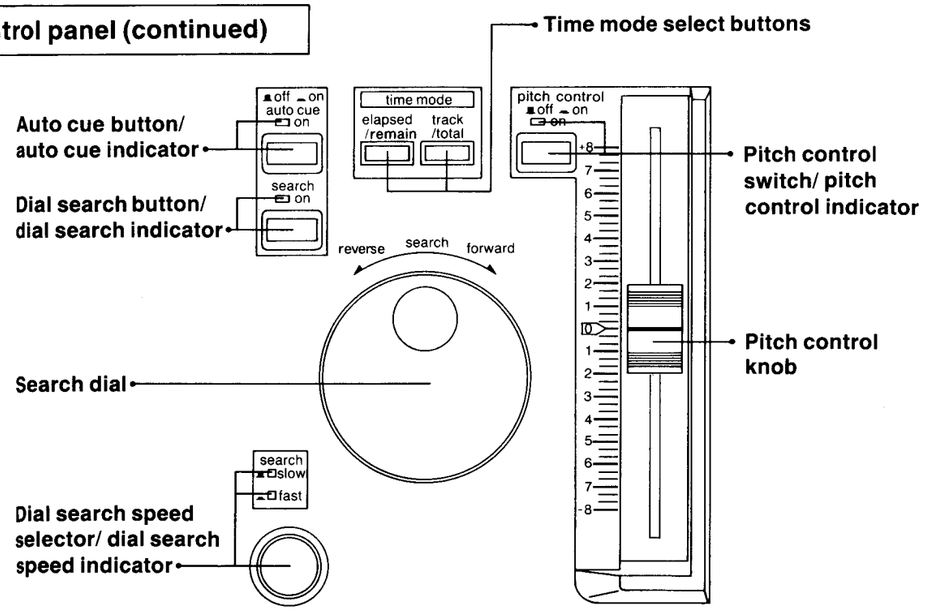

Rear panel

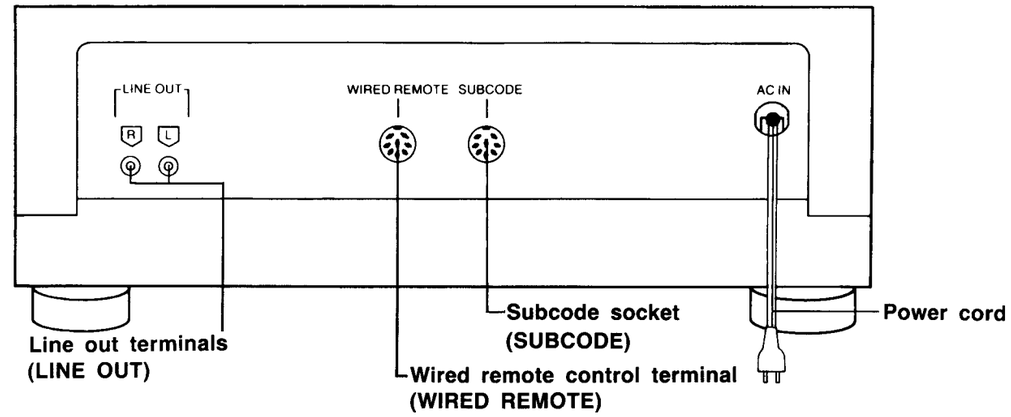

Remote control

EUR64185....U.S.A. and Canada
EUR64186....Others

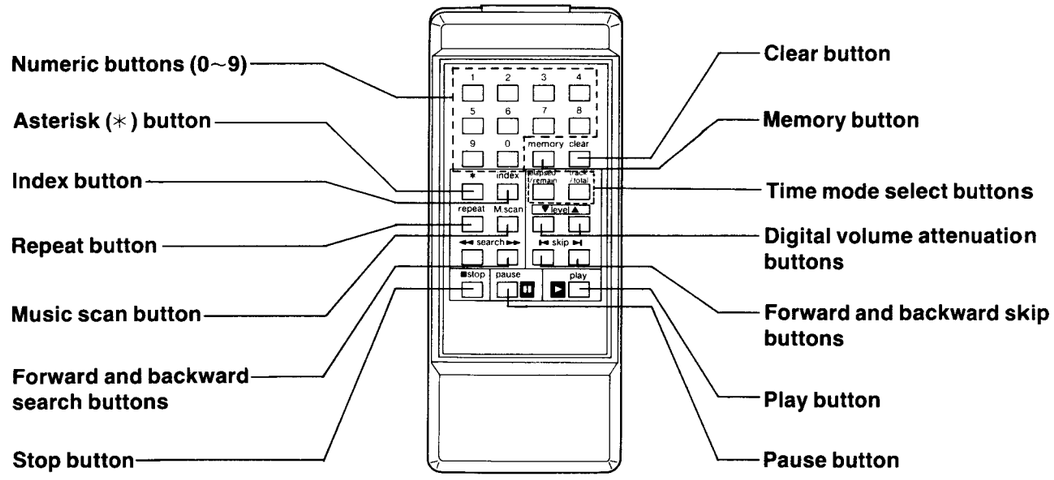

Playing a disc

1 Automatic play

■ **To play a disc from the first track to the end of the disc.**

1 Press (⏻) to turn power on. (See ❶ below.)

6 Press (⏻) to turn power off.

3 Insert a disc with the label side facing upward.

4 Push the cover down by hand to close it. (See ❷ below.)

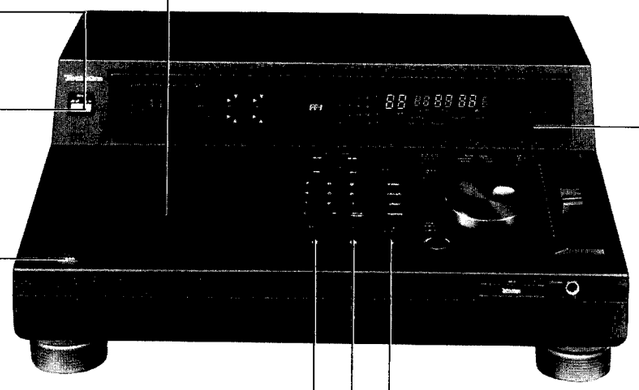

2 Press to open the disc compartment.

Emphasis indicator illuminates when a disc recorded with pre-emphasis is played.

■ **Press the stop button to stop disc play.**

■ **Press the pause button to briefly interrupt play.** (See ❹ below.)

5 Press the play button. (See ❸ below.)
Play begins from the first track.

❶ When power is turned on, the display panel illuminates as shown below:

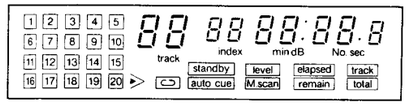

After about 5 seconds or after the disc compartment has been opened the display panel shows the following:

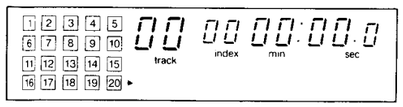

❷ •After inserting the disc and closing the cover the disc will begin to rotate. After the total number of tracks, and total playing time are displayed, the player switches to the stop mode.

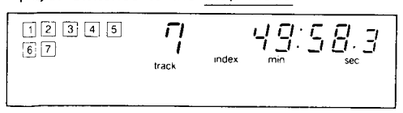

If a disc has more than 20 tracks the overflow indicator illuminates, and when the 21st track is played the overflow indicator flashes on and off.

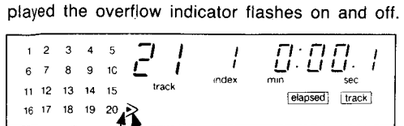

Illuminates / Flashes on and off during play

❸ •The play indicator (■) on the control panel illuminates and play begins from track 1.

Time display

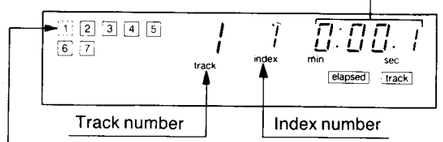

Track number / Index number

The border of the track number being played flashes on and off.

•When a disc having no indexes is played, " / " is constantly displayed in the index section.

•If the play button is pressed during disc play, disc play is started again from the first track **(auto-return play function)**.

•After the last track has been played the pickup returns to the beginning of the first track and the unit switches to the stop mode.
The play indicator (■) goes out.

❹ •The play indicator (■) goes out, the pause indicator (■) illuminates and the unit switches to the pause mode.

Press the play button to resume play.

•Remove the disc from the disc holder and turn off the power if the player is not to be used again for a while.

2 Random access play

■ **Starting disc play from a specific place on the disc.**

■ **From this page onward the following basic operations are omitted:**
- •Power on/off
- •Disc compartment open/close
- •Interrupting play
- •Stopping play

■ **Press the buttons in the order shown by the arrows.**

2-1. To start disc play from a specific track

■ **For example, to play from the beginning of track 3 to the end of the disc.**

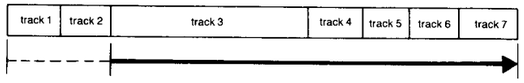

•The display below shows track 3 is specified.

Specify track no. → 3

Track display

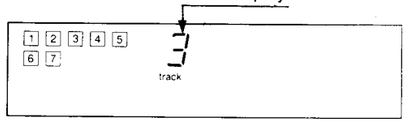

•When the play button is pressed, play begins from track 3.

•The border of the track being played flashes on and off.

play →

Flashes on and off

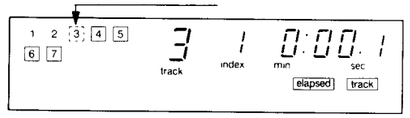

•The player switches to the stop mode when play has finished.

2-2. To play a disc from a specific index

(This is possible only on discs having indexes.)

■ **For example, to play from the beginning of index 2 of track 3 to the end of the disc.**

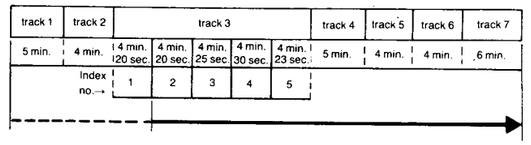

Specify track no. → 3

•When playing discs having only one track, remember to enter track number 1, then specify the index number.

Specify index → index

Specify index no. → 2

Index no. 2

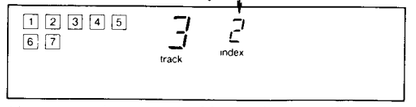

•Index numbers up to 99 can be specified.

play →

•When the play button is pressed, disc play begins from index 2 of track 3.

Flashes on and off

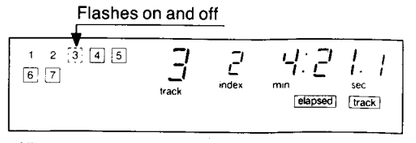

•When the end of the disc is reached, the player switches to the stop mode.

2-3. To play a disc from a specific starting time

■ For example, to play from the 2 min. 38.7 sec. point of track [5].

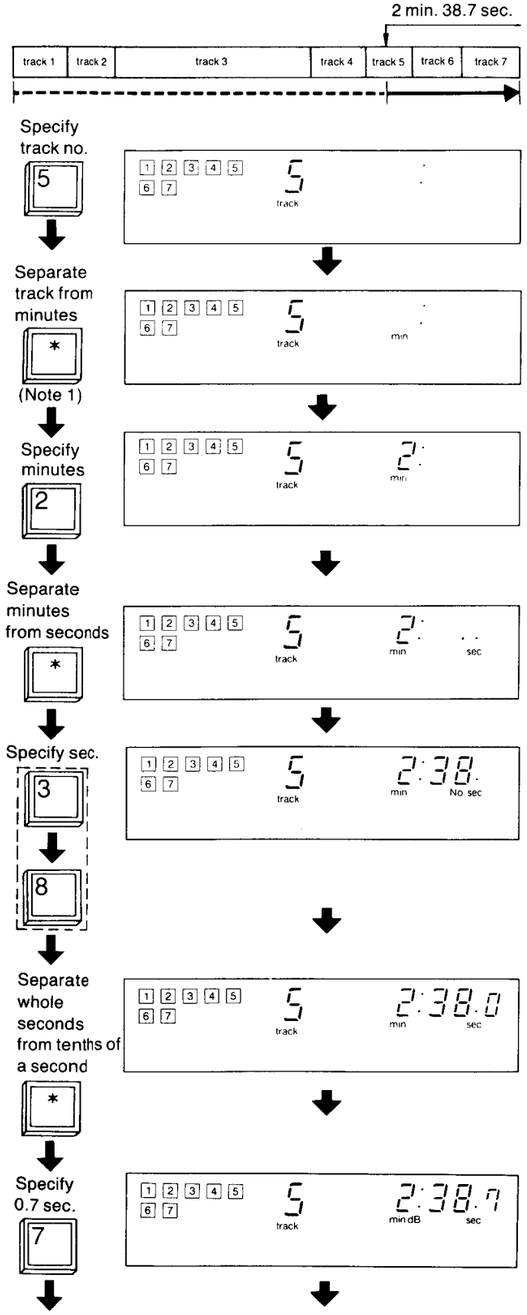

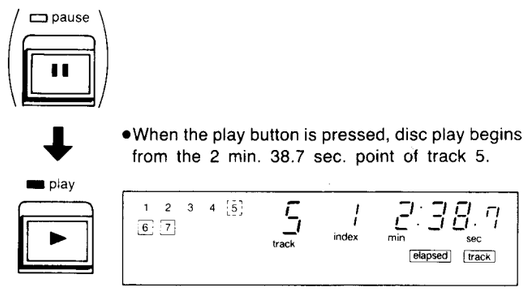

•When the play button is pressed, disc play begins from the 2 min. 38.7 sec. point of track 5.

Note 1)
When no minutes are to be specified, for example, if play is to begin at the 38.7 sec. point of track 5, press the numeric button "0" or press the asterisk button twice in a row, as shown below.

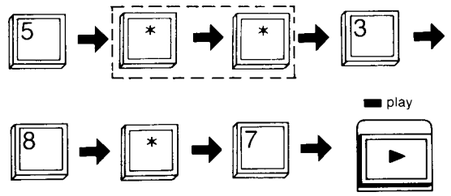

•An already specified time will be cancelled when a new time is entered or the clear button is pressed.

•If the starting time is specified while the unit is in the pause mode, press the pause button once and then press the play button to resume play.
Not pressing the pause button will cause a short delay before sound is heard.

Restarting play from the same point of time (By means of starting time confirmation.)

•Press the time recall button during play.

•The starting time is shown for about 20 seconds on the display panel. During that time play continues.

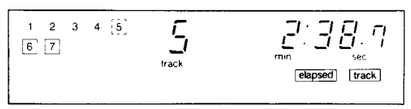

•If the play button is pressed during that time, play begins again from the location indicated on the display.

3 Program play

Using the program play function a maximum of 20 selections can be programmed in any sequence.
Index numbers can not be programmed.

3-1. Track program play (in any order)

■ For example, to play track [3], track [5] and track [1] in that order.

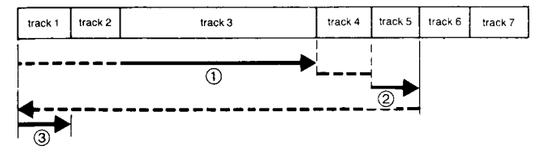

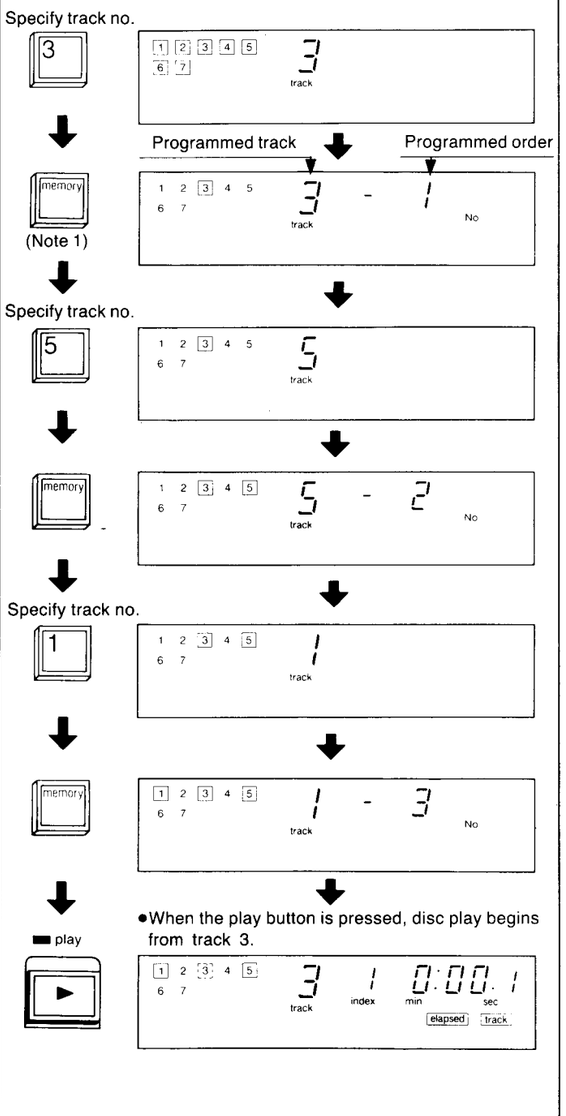

•When the play button is pressed, disc play begins from track 3.

Note 1) E (error) will be displayed momentarily if a track number not on the disc is specified.
If more than 20 selections are entered " F " (full) is shown in the display panel and no further selections can be programmed.

•If an incorrect entry is made while the unit is in the stop mode, pressing the clear button will cancel the last program entry.
However, if the clear button is pressed during disc play or in the pause mode, all memory contents are cleared and disc play continues from the current point to the end of the disc (memory clear function).

•Programming two tracks in a row.
For example, if tracks 3-5-5-1 are programmed in that order, press the memory button twice, as shown below. The double numeric button operation may be abbreviated.

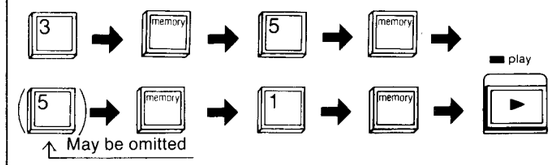

•After a track has been played its border goes out.

•The player switches to the stop mode when the last programmed track has been played.

4 Pitch control

This function allows fine adjustment of pitch (up to ±8%).

1. Press the pitch control switch to "on". The pitch control indicator illuminates.
2. Slide the pitch control knob upward or downward to the desired setting.

- When not using this function, press the pitch control switch again to release it (off).

Note:
In the center position (▷◁) a "click" can be perceived.
This position is the 0% standard pitch.
The +5.9% position is a half tone sharp (♯).
The −5.6% position is a half tone flat (♭).

- When the pitch has been changed, the elapsed or remaining playing time readings will differ from the actual times by the amount of pitch adjustment.

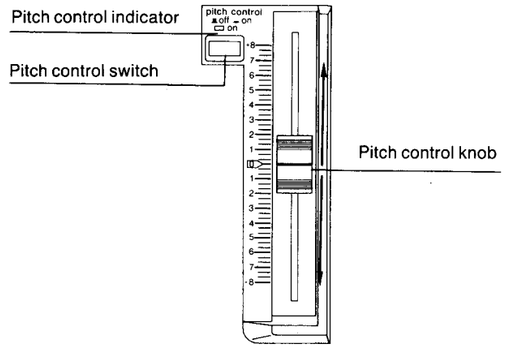

5 Skip play

(Skip play can be performed when the player is in the play or pause mode.)

This function allows quick access to the beginning of a track.
Note: Index skip play is not possible.

Forward skip

- The pickup skips the same number of tracks as the number of times the button is pressed.
- During automatic play, the pickup skips to the beginning of the next track each time the button is pressed.
- During program play or program repeat play, the pickup skips to the beginning of the next programmed track each time the button is pressed.
- While watching the track number display, press the forward skip button until the desired track has been located.

■ **Example:** To advance to the beginning of the fourth track and then to the beginning of the fifth track while listening to the third track.

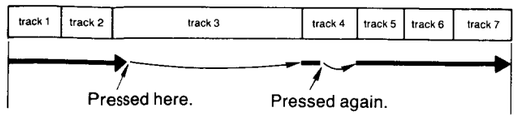

Forward skip
Press ▶▶| .

Backward skip

- During automatic play, the pickup skips to the beginning of the current track. If pressed again quickly, the pickup skips to the beginning of the previous track.
- During program play (repeat function not activated), the pickup skips backward only to the beginning of the current track.
- During program repeat play, the pickup skips to the beginning of the current track. If pressed again quickly, the pickup skips to the beginning of the previous programmed track.
- The pickup skips the same number of tracks as the number of times the button is pressed.
- While watching the track number display, press the backward skip button until the desired track has been located.

Remember that for backward skip, the present track is included in the count.

■ **Example:** To return to the beginning of the third track and then to the beginning of the second track, while listening to the third track.

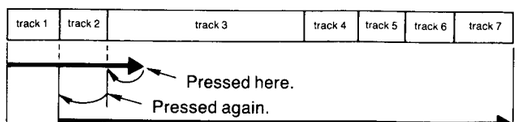

Backward skip
Press |◀◀ .

6 Search play (forward/backward)

(Search play can be performed when the player is in the play or in the pause mode.)

This function allows search to any desired point on the disc.

Search play can be performed by using either the forward and backward rocking/search buttons Ⓐ or the search dial Ⓑ.
- The position of the pickup is confirmed by watching the display panel or listening to the sound from the compact disc.

Ⓐ Search play using the forward and backward rocking/search buttons (Button search)

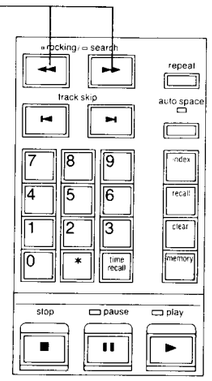

Depending on how these buttons are pressed, search with three different speeds is possible.

Forward button

Backward button

1. Press one of these buttons momentarily to move the pickup by one pit-track (one disc rotation). This allows very fine rocking search.
2. When one of these buttons is held down, the pickup will move slowly at first.
3. When one of these buttons is held down for more than about 3 seconds, the pickup will move rapidly.

- Release the button when the desired point has been reached (as shown by the display).
- If these buttons are pressed during play, sound can be heard during the search operation.
  During steps 2 and 3, the output level is decreased by −12 dB (1/4) compared with the normal level.

About rocking search
When two or more CD players are used at a time, as often happens in a studio for example, fade-in and fade-out of the units have to be timed exactly. The rocking search function is useful for this because it permits movement of the pickup across one pit-track (at inner diameter in about 0.13 second) each time either button is pressed momentarily.

Ⓑ Search play using the search dial (Dial search)

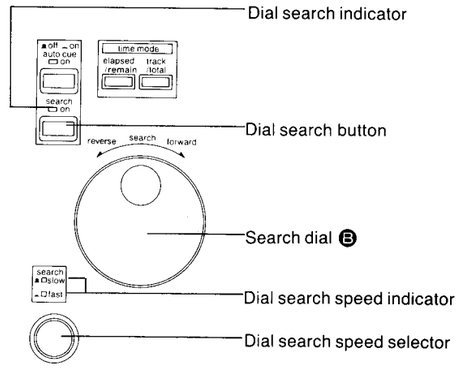

- Usually no sound can be heard while the unit is in the pause mode. However, if the dial search button is in the "on" position, sound can also be heard during the pause mode.
- Dial search can be performed at two different speeds depending upon the position (slow and fast).
- If the search dial is turned clockwise the pickup performs forward search, and if it is turned counterclockwise, the pickup performs, backward search.
  However, when the dial search button is not in the "on" position and the dial search indicator (■) is not illuminated, dial search is not possible.

1. Press the dial search button "on".
   The dial search indicator (■) illuminates.
   The dial search speed indicator (■) for "slow" or "fast" illuminates also.
2. Press the dial search speed selector to change the selected search speed.

- Perform search while watching the display panel or listening to the sound from the disc.
  The sound level is not reduced during dial search.

Notes:
- The search speed changes according to the speed at which the search dial is turned. However, you can not force the pickup to search faster or slower than its predetermined limits.
- When dial search is performed with the unit in the play mode, the normal play speed of the pickup is added to (forward search) or subtracted from (backward search) the dial search speed.

7 Time mode display function

(During play or in the pause mode.)

- The appropriate time mode indicators illuminate to show which time mode display has been selected.
- Pressing the elapsed/remain button will change the mode from elapsed time to remaining time or vice versa.
- Pressing the track/total button will change the mode from track time to total (disc or programmed) time or vice versa.
- When changing the time display mode, use the time mode indicators to confirm selection of the desired time display mode.

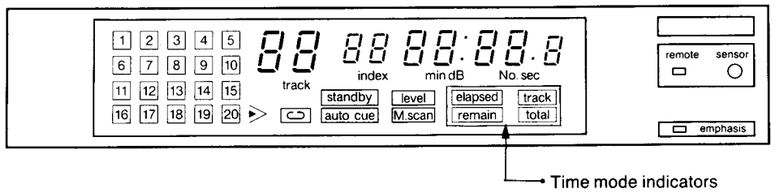

■ For example, if the time mode select button is pressed when playing a disc of 49 min. 58.3 sec. at a point 2 min. 10 sec. after the beginning of track 5:

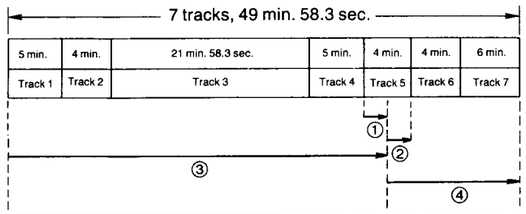

	Illuminated time mode indicators	Time display	Display panel
1	elapsed track	Elapsed playing time from the beginning of the current track.	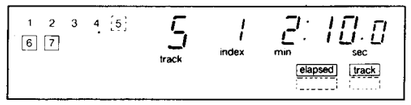
2	remain track	Remaining playing time of the current track.	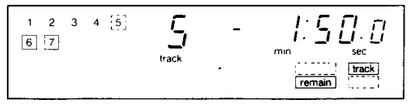
3	elapsed total	Playing time from the beginning of the first track. ●During program play, the total remaining programmed playing time is displayed.	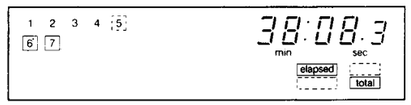
4	remain total	Disc remaining playing time. ●During program play, the total elapsed programmed playing time is displayed.	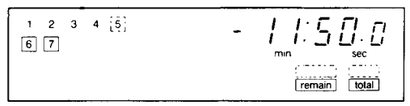

Note:

- During random access play, skip play and search play, the total time from the beginning of the first track is displayed in mode 3. (This is not an actual elapsed playing time.)
- Tracks skipped during program play are not included in the elapsed playing time.

8 Auto space function

Auto space function

When this function is activated, a silent interval of 3 seconds is created between all tracks.
This 3 seconds interval occurs instead of, not in addition to, any pause interval recorded on the disc.

- Press the auto space button.
  Auto space indicator (■) on the display panel illuminates.
- The following diagram shows the silent interval between all songs is about 3 seconds.

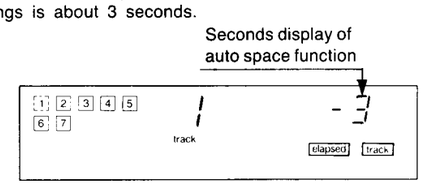

- At the beginning of each track −3, −2 and then −1 is displayed.

■ Press this button again to cancel the auto space function.
The auto space indicator (■) goes out.

Note:
When the auto cue function is used together with auto space the auto space indicator illuminates, but only the auto cue function operates.

9 Auto cue function (automatic standby)

Auto cue function

At the beginning of each track on most discs, a silent interval of about one second is recorded. Therefore, when play is started from 0 min. 00 sec, music is not heard immediately.
When the auto cue function is activated, the unit automatically detects the beginning of the music on each track and then switches to standby mode.
When play is started from this point (by pressing the play button) music is heard immediately.

1 Press the auto cue button (▙▁▟).
The auto cue indicator (■) above the button and the auto cue indicator on the display panel illuminate.

2 Press the play button.
The standby indicator on the display panel illuminates and the unit switches to the standby mode.

3 To start disc play, press the play button.
The next track will begin immediately.
The standby indicator will go out, but both auto cue indicators will remain illuminated.

Notes:

- In this mode, the unit will switch to standby at the beginning of each track. It is therefore necessary to press the play button to resume play at the beginning of every track.
- This function can also be used during program play.
  The unit will then switch to standby at the beginning of each programmed track.
- The illustration below shows that the unit is in the standby mode at the beginning of the music portion of track 1.

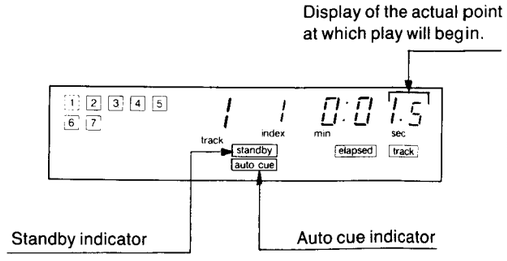

- If the auto cue button is pressed during play, this function is activated at the beginning of the next track.

■ When not using this function, press the auto cue button again to release it (▟▁▙). The standby and both auto cue indicators will go out.

■ CLEANING OF LENS

If the lens is stained causing sound skip or operation failure, open the top cover by pressing the open button, and clean the lens.

- **To remove dust or dirt**

Blow the lens with the blower provided in the cleaning kit to remove dust or dirt.

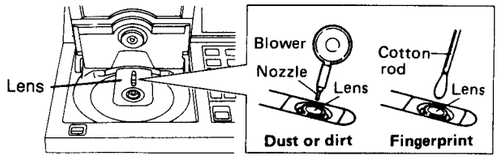

- **To remove fingerprint**

If the blower is not enough, moisten the cotton rod with the lens cleaner solution and wipe the lens with it from center of the lens to outside.

Cautions:

- Do not directly apply the cleaner solution to the lens. Do not apply too much solution to the cotton rod or otherwise the solution will flow into the player.
- Wipe the lens carefully. Do not give too much stress to the lens or otherwise it may scratch the lens or cause optical pickup trouble.
- If the solution should be too much applied, wipe the lens with a dry cotton rod.

Lens cleaning kit (Part No. : SZZP1038C)

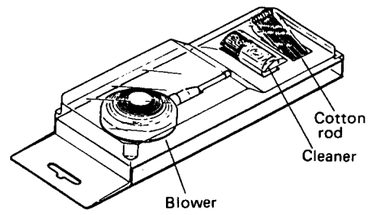

■ HANDLING PRECAUTIONS FOR OPTICAL PICKUP

The laser diode in the optical pickup may break down due to potential difference caused by static electricity of clothes or human body.
So, be careful of electrostatic breakdown during repair of the optical pickup.

- **Handling of optical pickup**

1. Do not give excessive shock to the optical pickup because it is of extremely precise structure.
2. To prevent the breakdown of the laser diode, an anti-static shorting pin is inserted into the flexible board. **(FPC board)**
   When removing or connecting the short pin, finish the job in as short time as possible.
3. Take care not to apply excessive stress to the flexible board. **(FPC board)**
4. Do not turn the variable resistor (laser power adjustment). It has already been adjusted.

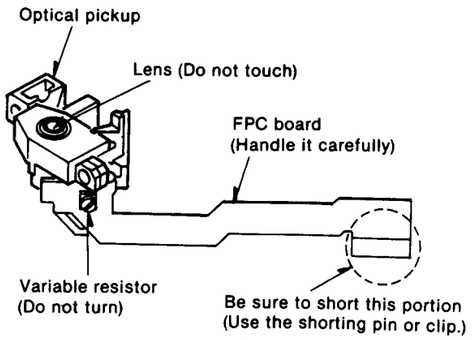

- **Grounding for electrostatic breakdown prevention**

1 Human body grounding
Use the anti-static wrist strap to relieve the static electricity from your body.
2. Work table grounding
Put a conductive material (sheet) or steel sheet on the area where the optical pickup is placed, and ground the sheet.

Caution:
The static electricity of your clothes will not be grounded through the wrist strap. So, take care not to let your clothes touch the optical pickup.

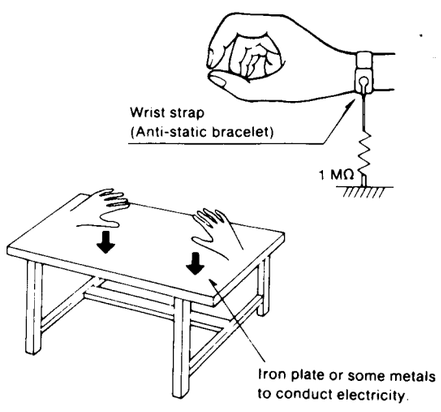

■ DISASSEMBLY INSTRUCTIONS

- **Cautions for laser diode light emission**

In this unit, the compact disc information is read by the laser beam diffused from the laser diode in the optical pickup. It is dangerous to directly look at the laser beam or to let it touch your body. During the normal operation of this unit, the laser diode will not emit light unless the disc holder is closed and S101 (laser ON/OFF switch) is turned ON. When servicing the unit, note that the laser diode emits lights if power switch is turned on with S101 ON.

- **This unit uses FPC and care should be taken during assembly and disassembly.**

Ref. No. 1	How to remove the front panel and check the main unit
Procedure 1	1. Remove the 5 setscrews.

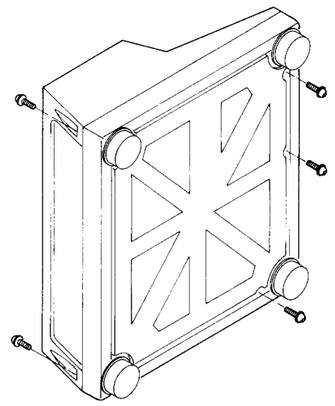

2. Lift the front panel and pull out the power switch connector (CN1).
3. Remove the lead wire (headphone, pitch control VR) from its holder on the front panel. Cut off the lead wire clamper.

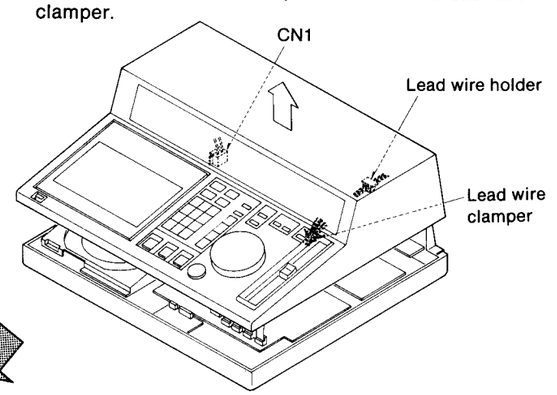

4. Check the main unit as shown in the figure below.

Note: When checking the main unit power on.
a. Pull out the connector CN451 on the laser switch control P.C.B. and short it with a clip.
b. Remove the disc clamper magnet. (See page 18, Ref. No. 6.)
c. Place a disc on the disc tray, and then, place the disc clamper magnet on it.
d. Connect CN1 on the power P.C.B. with the lead wire.

Caution regarding laser radiation
It is extremely dangerous to look at or touch laser radiation. Care must be taken when handling to prevent radiation exposure.

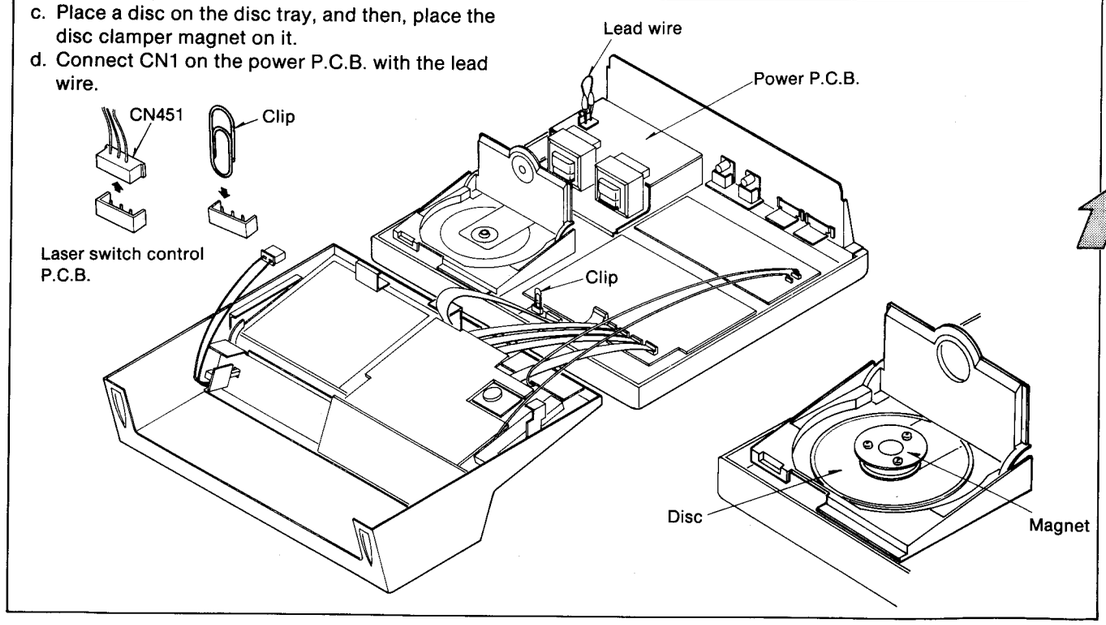

5. Otherwise, remove the main circuit P.C.B., and check as shown below.

(See page 18, Ref. No. 8.)

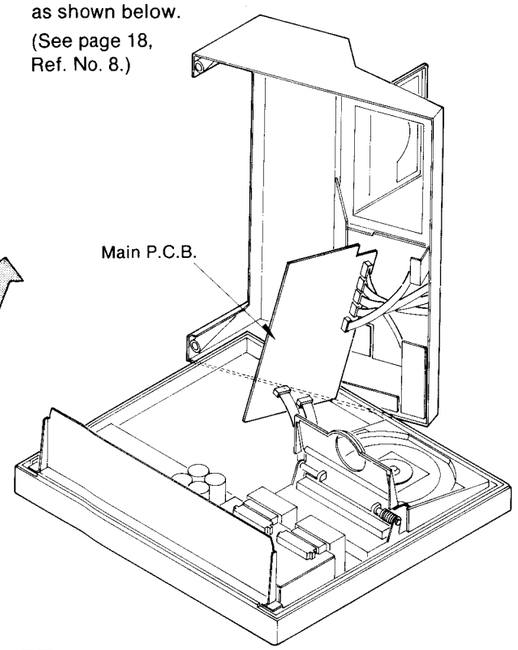

Ref. No. 2	How to remove the operation P.C.B. and FL P.C.B.
Procedure 1 ➧ 2	

- Remove the 20 setscrews.

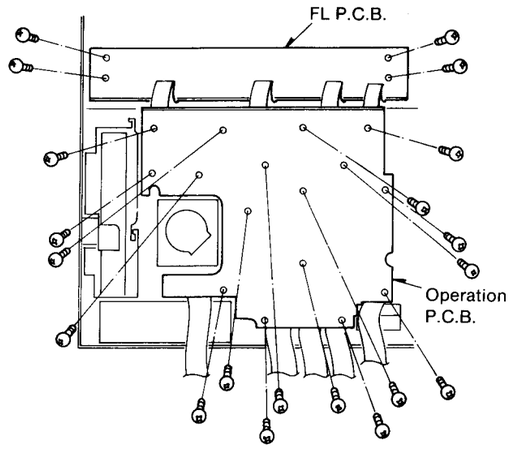

Ref. No. 3	How to remove the operation buttons
Procedure 1 ➧ 2 ➧ 3	

1. Pull out the search dial and pitch control knob.

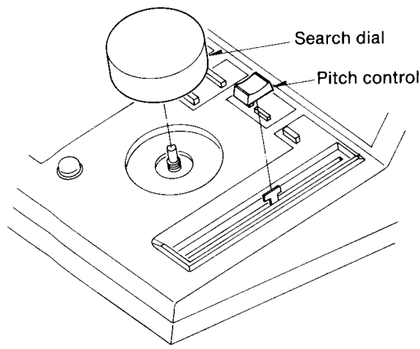

Note: When replacing the pitch control knob, it must be properly aligned. (See figure below.)

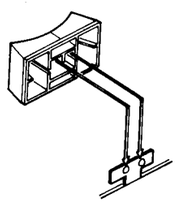

2. Remove the 13 setscrews. Remove the search volume, pitch control volume, headphone P.C.B. and the 2 metal pieces which hold the panel.

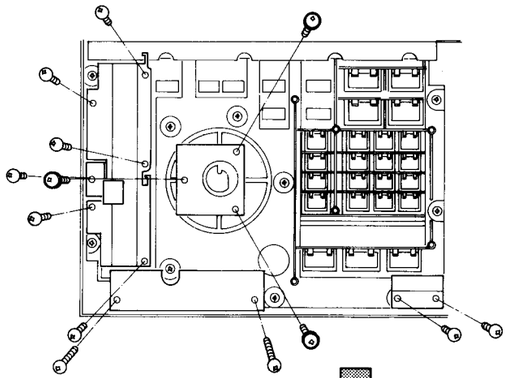

3. Remove the 12 setscrews.

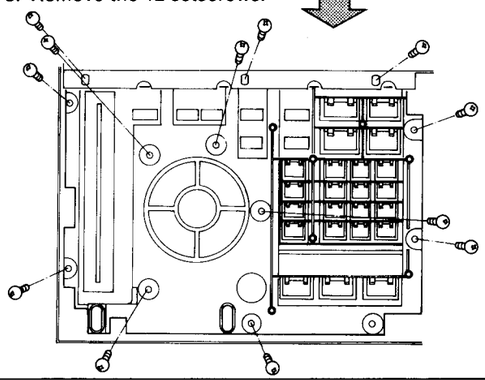

Ref. No. 4	How to remove the open button and plunger
Procedure 1 ➧ 4	

1. Remove the 4 setscrews Ⓐ.
2. Remove the 2 setscrews Ⓑ.

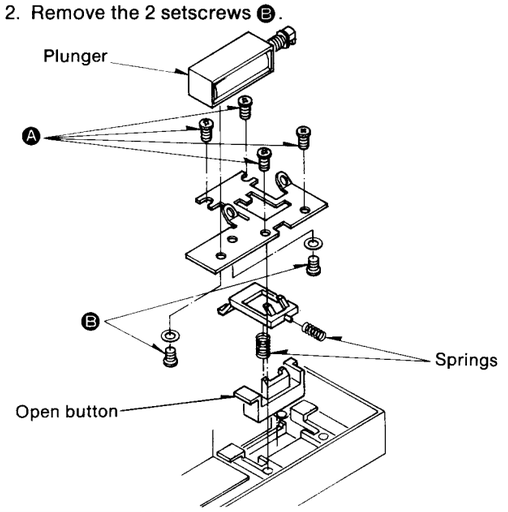

Ref. No. 5	How to remove the disc compartment panel
Procedure 1 ➧ 5	

1. Remove the spring from the damper fitting plate.
2. Remove the 3 setscrews (❶~❸). Remove the damper fitting plate.
3. Remove the 2 setscrews (❹ and ❺).

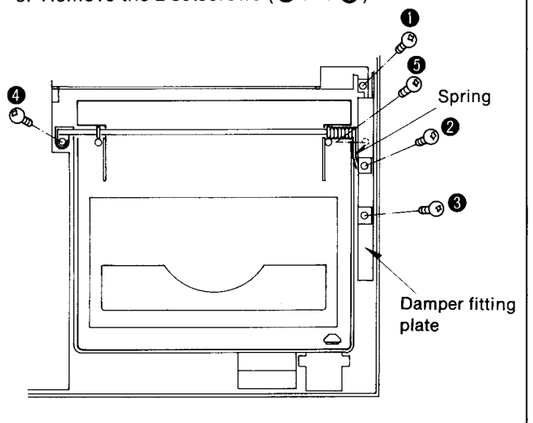

Ref. No. 6	How to remove the disc clamper magnet
Procedure 1 ➧ 6	

- Remove the 3 setscrews.

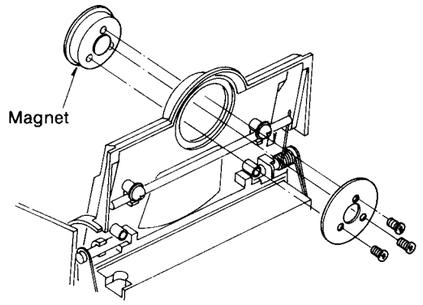

Ref. No. 7	How to remove the power switch
Procedure 1 ➧ 7	

- Remove the 2 setscrews.

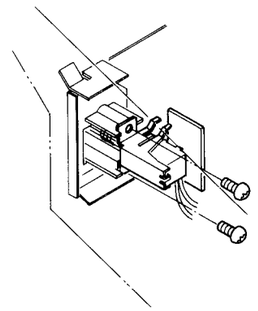

Ref. No. 8	How to remove the audio P.C.B. and main P.C.B.
Procedure 1 ➧ 8	

- **Audio P.C.B.**
1. Remove the 4 setscrews (❶~❹).
2. Remove the P.C.B. from its supports (arrows Ⓐ→Ⓑ).

- **Main P.C.B.**
1. Remove the 4 setscrews (❺~❽).
2. Remove the P.C.B. from its supports (arrows Ⓐ→Ⓑ).

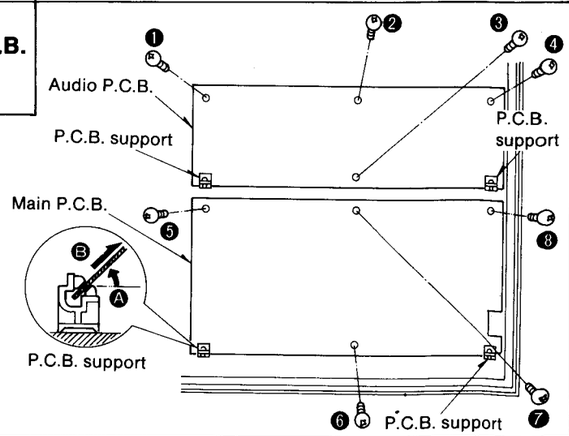

Ref. No. 9 — How to remove the disc tray

Procedure 1 ➧ 9

1. Remove the 4 setscrews.
2. Lower the disc holder as shown by arrow Ⓐ.
3. Remove the disc tray in the direction indicated by arrow Ⓑ.

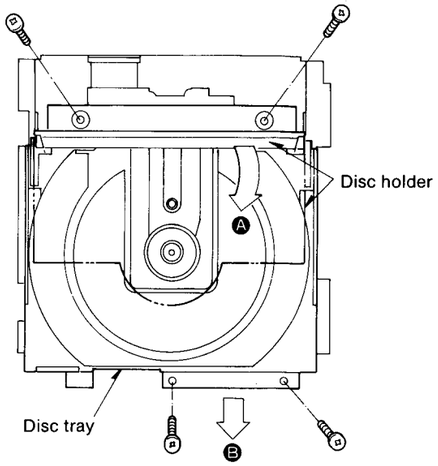

Ref. No. 10 — How to remove the power transformer

Procedure 1 ➧ 10

1. Remove the 9 setscrews.
2. Remove the stopper on the power P.C.B. with pliers.
3. Pull off the power transformer in the direction indicated by the arrows.

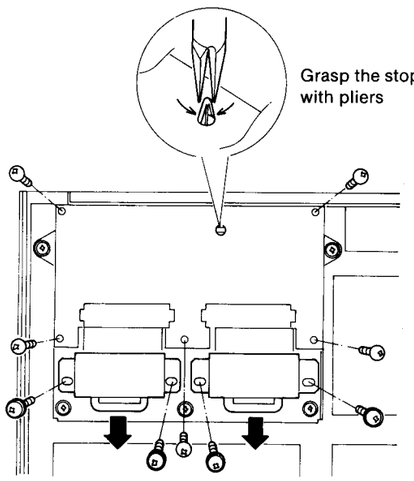

Ref. No. 11 — How to remove the disc clamper

Procedure 1 ➧ 11

1. Remove the 2 E-rings (❶ and ❷).
2. Pull out the shaft (B).
3. Remove the disc clamper in the direction shown by the arrow.

To install

1. Hook part Ⓐ of the clamp spring on part Ⓑ of the loading base.
2. Insert the shaft (A) into the hole of the loading base, and place E-ring ❷.
3. Insett the shaft (B) into the hole of the loading base, and place E-ring ❶.

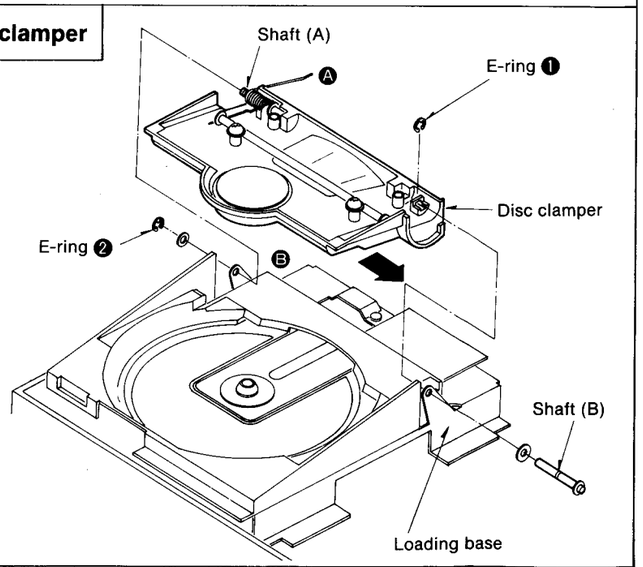

Ref. No. 12 — How to remove the traverse unit assembly

Procedure 1 ➧ 12

Refer to "HANDLING PRECAUTIONS FOR OPTICAL PICKUP" on page 15.

1. Remove the 4 setscrews.
2. Remove the 3 connectors (CN104, CN303, CN451).
3. Remove the flexible board (CN105).

Note: To prevent damage to the laser diode, insert the shorting pin into the flexible board.

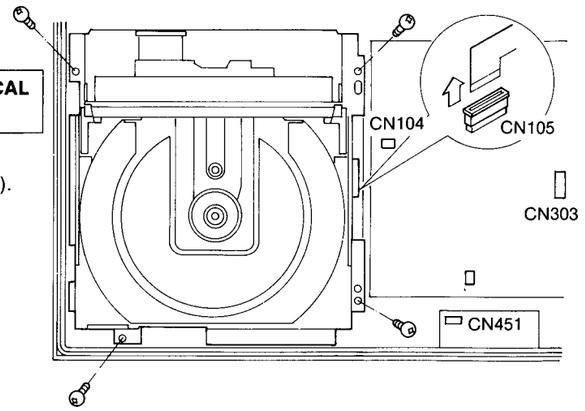

Ref. No. 13 — How to remove the traverse deck

Procedure 12 ➧ 13

- Remove the 4 nuts.

Note: The 4 springs are different colors and must be reinstalled in their original positions.

Refer to "HANDLING PRECAUTIONS FOR OPTICAL PICKUP" on page 15.

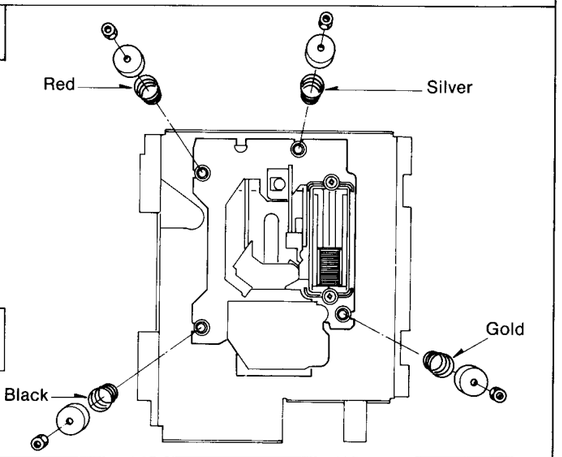

Ref. No. 14 — How to remove the optical pickup

Procedure 13 ➧ 14

- Remove in the numbered order shown in the figure.

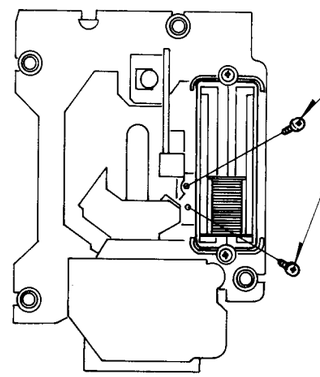

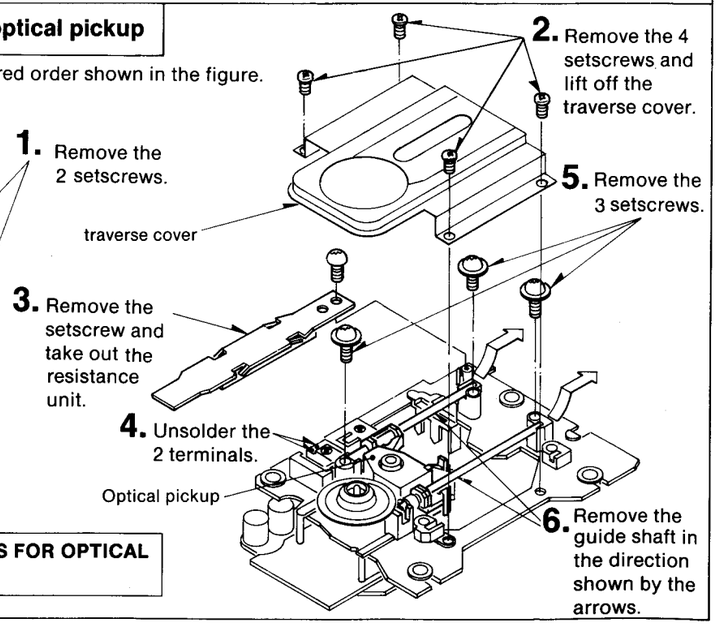

Refer to "HANDLING PRECAUTIONS FOR OPTICAL PICKUP" on page 15.

■ RESISTORS AND CAPACITORS

Notes: * Important safety notice:
Components identified by ⚠ mark have special characteristics important for safety. When replacing any of these components use only manufacturer's specified parts.
* Bracketed indications in Ref. No. columns specify the area.
Parts without these indications can be used for all areas.

Numbering System of Resistor

Example

ERD	25	F	J	102
Type	Wattage	Shape	Tolerance	Value

ERX	2	AN	J	471
Type	Wattage	Shape	Tolerance	Value 47x10¹ (ohm)

Numbering System of Capacitor

Example

ECKD	1H	102	Z	F
Type	Voltage	Value	Tolerance	Peculiarity

ECEA	50	M	330
Type	Voltage	Peculiarity	Value (33x10° microfarad)

Resistor Type	Wattage	Tolerance
ERD : Carbon ERG : Metal Oxide ERX : Metal Film ERQ : Fuse Type Metal ERD□ L : Carbon (chip) ERO□ K : Metal Film (chip) ERC : Solid	10 : 1/8W 12 : 1/2W 25 : 1/4W 1A : 1W 18 : 1/8W S2 : 1/4W S1 : 1/2W 2F : 1/4W 50 : 1/2W 2A : 2W	J : ±5% F : ±1% G : ±2% K : ±10%

Capacitor Type	Voltage	Tolerance
ECE : Electrolytic ECCD : Ceramic ECKD : Ceramic ECQM : Polyester ECQP : Polyproylene ECG : Ceramic ECEA□□□N: Non Polar Electrolytic QCU□ : Ceramic (Chip Type) ECUX : Ceramic (Chip Type) ECF : Semiconductor EECW : Liquid electrolyte double layer capcitor	0J : 6.3V 1A : 10V 1C : 16V 1E : 25V 1H : 50V 1V : 35V 50 : 50V 05 : 50V 2H : 500V 2A : 100V 1 : 100V KC : 400V AC KC : 125VAC (UL) 1J : 63V	C : ±0.25pF J : ±5% K : ±10% Z : +80% −20% P : +100% −0% M : ±20% D : ±0.5pF G : ±2%

Ref. No.	Part No.	Part Code
RESISTORS		
R11	ERDS2TJ822	001 152 2455 0
R12	ERDS2TJ472	001 152 2362 4
R13, R14 ⚠	ERDS2TJ151	001 152 2426 5
R15, R16 ⚠	ERDS2TJ151	001 152 2426 5
R101	ERDS2TJ392	001 152 2439 0
R102	ERDS2TJ222	001 152 2353 5
R103	ERDS2TJ273	001 152 2436 3
R104	ERDS2TJ223	001 152 2432 7
R105	ERDS2TJ182	001 152 2352 6
R106	ERDS2TJ473	001 152 2363 3
R107	ERDS2TJ274	001 152 2437 2
R109, R110	ERDS2TJ473	001 152 2363 3
R111, R112	ERDS2TJ274	001 152 2437 2
R113, R114	ERDS2TJ473	001 152 2363 3
R115	ERDS2TJ102	001 152 2346 4
R116	ERDS2TJ472	001 152 2362 4
R117	ERDS2TJ270	001 152 2434 5
R118	ERDS2TJ3R3	001 152 3152 8
R119	ERDS2TJ101	001 152 2421 0
R120	ERDS2TJ270	001 152 2434 5
R121	ERDS2TJ3R3	001 152 3152 8
R122	ERDS2TJ153	001 152 2351 7
R123	ERDS2TJ101	001 152 2421 0
R124	ERDS2TJ103	001 152 2347 3
R125	ERDS2TJ104	001 152 2348 2
R126	ERDS2TJ152	001 152 2350 8
R127	ERDS2TJ682	001 152 2365 1
R128	ERDS2TJ153	001 152 2351 7
R129	ERDS2TJ224	001 152 2433 6
R130	ERDS2TJ122	001 152 2423 8
R131, R132	ERDS2TJ333	001 152 2358 0
R133	ERDS2TJ102	001 152 2346 4
R134	ERDS2TJ392	001 152 2439 0
R135	ERDS2TJ102	001 152 2346 4
R136	ERDS2TJ182	001 152 2352 6
R137	ERDS2TJ681	001 152 2449 8
R138	ERDS2TJ153	001 152 2351 7
R139	ERDS2TJ223	001 152 2432 7
R140	ERDS2TJ821	001 152 2454 1
R141	ERDS2TJ333	001 152 2358 0
R142	ERDS2TJ222	001 152 2353 5
R143	ERDS2TJ474	001 152 2443 4
R144	ERDS2TJ223	001 152 2432 7
R145	ERDS2TJ224	001 152 2433 6
R146	ERDS2TJ473	001 152 2363 3
R147	ERDS2TJ223	001 152 2432 7
R148	ERDS2TJ473	001 152 2363 3
R149, R150	ERDS2TJ222	001 152 2353 5
R151	ERDS2TJ392	001 152 2439 0
R152	ERDS2TJ101	001 152 2421 0
R153	ERDS2TJ103	001 152 2347 3
R154	ERDS2TJ392	001 152 2439 0
R155	ERDS2TJ101	001 152 2421 0
R156	ERDS2TJ223	001 152 2432 7
R157	ERDS2TJ473	001 152 2363 3
R158	ERDS2TJ683	001 152 2450 5
R159	ERDS2TJ272	001 152 2354 4
R160, R161	ERDS2TJ102	001 152 2346 4
R162, R163	ERDS2TJ102	001 152 2346 4
R164	ERDS2TJ822	001 152 2455 0
R165	ERDS2TJ682	001 152 2365 1
R166, R167	ERDS2TJ222	001 152 2353 5
R168	ERDS2TJ682	001 152 2365 1
R169	ERDS2TJ822	001 152 2455 0
R170	ERDS2TJ334	001 152 2438 1
R171	ERDS2TJ223	001 152 2432 7
R172, R173	ERDS2TJ472	001 152 2362 4
R174	ERDS2TJ154	001 152 2427 4
R175	ERDS2TJ120	001 152 3146 6
R176	ERDS2TJ471	001 152 2361 5
R177	ERDS2TJ681	001 152 2449 8
R178	ERDS2TJ270	001 152 2434 5
R179	ERDS2TJ472	001 152 2362 4
R301	ERDS2TJ822	001 152 2455 0
R303	ERDS2TJ474	001 152 2443 4
R304, R305	ERDS2TJ223	001 152 2432 7
R306	ERDS2TJ152	001 152 2350 8
R307	ERDS2TJ102	001 152 2346 4
R308	ERDS2TJ103	001 152 2347 3
R309	ERDS2TJ104	001 152 2348 2
R311	ERDS2TJ103	001 152 2347 3
R312	ERDS2TJ122	001 152 2423 8
R331	ERDS2TJ102	001 152 2346 4
R332, R333	ERDS2TJ101	001 152 2421 0
R334	ERDS2TJ684	001 152 2451 4
R335	ERDS2TJ472	001 152 2362 4
R336	ERDS2TJ272	001 152 2354 4
R351	ERDS2TJ102	001 152 2346 4
R352	ERDS2TJ474	001 152 2443 4
R353, R354	ERDS2TJ472	001 152 2362 4
R355	ERDS2TJ332	001 152 2357 1
R356	ERDS2TJ272	001 152 2354 4
R357	ERDS2TJ183	001 152 2429 2
R358, R359	ERDS2TJ104	001 152 2348 2
R360, R361	ERDS2TJ222	001 152 2353 5
R362, R363	ERDS2TJ103	001 152 2347 3
R364, R365	ERDS2TJ103	001 152 2347 3
R366	ERDS2TJ274	001 152 2437 2
R367	ERDS2TJ823	001 152 2456 9
R368	ERDS2TJ473	001 152 2363 3
R369	ERDS2TJ121	001 152 2349 1
R370	ERDS2TJ331	001 152 2356 2
R372	ERDS2TJ221	001 152 2431 8
R373	ERDS2TJ391	001 152 2360 6
R374	ERDS2TJ681	001 152 2449 8
R375	ERDS2TJ220	001 152 2430 9
R376	ERDS2TJ101	001 152 2421 0
R401	ERDS2TJ104	001 152 2348 2
R402, R403	ERDS2TJ222	001 152 2353 5
R404, R405	ERDS2TJ222	001 152 2353 5
R406	ERDS2TJ105	001 152 2422 9
R407, R408	ERDS2TJ474	001 152 2443 4
R409, R410	ERDS2TJ472	001 152 2362 4
R411, R412	ERDS2TJ103	001 152 2347 3
R413, R414	ERDS2TJ103	001 152 2347 3
R415	ERDS2TJ472	001 152 2362 4
R419, R420	ERDS2TJ223	001 152 2432 7
R421, R422	ERDS2TJ223	001 152 2432 7
R423, R424	ERDS2TJ223	001 152 2432 7
R425, R426	ERDS2TJ223	001 152 2432 7
R427	ERDS2TJ223	001 152 2432 7
R428	ERDS2TJ392	001 152 2439 0
R429, R430	ERDS2TJ472	001 152 2362 4
R431, R432	ERDS2TJ472	001 152 2362 4
R433	ERDS2TJ472	001 152 2362 4
R434	ERDS2TJ332	001 152 2357 1
R435	ERDS2TJ103	001 152 2347 3

Ref. No.	Part No.	Part Code
CAPACITORS		
C1 ⚠	ECKDKC103PF2	001 103 3734 7
C11	ECEA1HU101	001 120 3252 3
C12, C13	ECEA1AU221	001 120 3131 1
C14, C15	ECEA1CU100	001 120 2905 3
C16, C17	ECEA0JS221	001 120 2925 9
C18, C19 ⚠	ECEA1CU222	001 120 3074 3
C22	ECKR1H103ZF5	
C23, C24	ECEA1EU471	001 120 2907 1
C25, C26	ECEA1CU100	001 120 2905 3
C101	ECQM1H104KV3	
C103	ECEA1HN2R2S	001 120 0356 8
C104	ECQM1H103JZ	001 106 0667 8
C105	ECQM1H224KVW	001 106 5164 6
C107, C108	ECEA1HKNR22B	
C109	ECEA1HN2R2SE	
C110	ECQM1H122KVW	
C111	ECQM1H473JZ	001 106 0810 9
C112	ECFR1H104ZFM	001 108 0794 2
C113	ECQM1H153KV3	001 106
C114	ECEA1HN3R3S	001 120 0358 6
C115	ECFR1H104ZFM	001 108 0794 2
C116	ECQM1H153KV3	001 106
C117	ECQM1H104KV3	
C118	ECQM1H104JZ	001 106 0675 8
C119	ECEA0JU471	001 120 2924 0
C120	ECEA1HKR33	001 120 0337 1
C121	ECKW1H182KB5	
C122	ECKD1H682KB	001 103 1592 1
C123	ECQM1H333KVW	
C124	ECCD1H221K	001 103 0508 7
C125	ECEA1HU010	001 120 2842 1
C126	ECEA0JU220	001 120 4670 5
C127	ECKD1H681K	001 103 1580 5
C128	ECKD1H103PF	001 103 1449 7
C129, C130	ECCD1H221K	001 103 0508 7
C131, C132	ECKD1H102KB	001 103 1414 8
C133	ECFR1H104ZFM	001 108 0794 2
C134	ECEA1HU010	001 120 2842 1
C135	ECEA1HK0R1	001 120 0340 6
C136	ECCD1H220KC	001 103 0494 6
C139	ECKD1H681K	001 103 1580 5
C140, C141	ECKD1H102KB	001 103 1414 8
C142, C143	ECEA1CU100	001 120 2905 3
C144	ECEA0JU470	001 120 3125 9
C145	ECKR1H103ZF5	
C146	ECEA0JS221	001 120 2925 9
C148	ECKR1H103ZF5	
C149, C150	ECQM1H333JZ	001 106 0779 1
C151	ECQM1H102JZ	001 106 0661 4
C152	ECQM1H153KV3	001 106
C153	ECEA0JS221	001 120 2925 9
C154	ECKD1H681K	001 103 1580 5
C155	ECKD1H222KB	001 103 1494 2
C156	ECFF1H104ZF	001 108 0906 2
C158	ECCR1H820K5	
C159	ECFF1C104ZF	001 108 0983 9
C301	ECEA1HN2R2S	001 120 0356 8
C302, C306	ECFR1H104ZFM	001 108 0794 2
C307	ECFR1H104ZFM	001 108 0794 2
C308	ECKD1H471KB	001 103 1551 0
C309, C310	ECFF1H104ZF	001 108 0906 2
C311	ECFR1H104ZFM	001 108 0794 2
C312	ECEA1HN2R2S	001 120 0356 8
C331	ECQV1H474JZ3	
C332	ECEA0JU470	001 120 3125 9
C333	ECKD1H103PF	001 103 1449 7
C335, C336	ECEA0JU101	001 120 2829 8
C351, C352	RCBS1C103MYY	001 103 8060 6
C353	RCBS1C472MXY	
C354	ECCD1H220JU5	
C355	ECCD1H330JS5	
C356	RCBS1C472MXY	
C357, C358	RCBS1H100JCY	001 103 5563 0
C359, C360	RCBS1C103MYY	001 103 8060 6
C361, C362	RCBS1C103MYY	001 103 8060 6
C363, C364	RCBS1C103MYY	001 103 8060 6
C365	RCBS1C103MYY	001 103 8060 6
C366	ECEA1HN0101S	001 120 0354 0
C367	RCBS1H220JLY	001 103 5601 1
C368	RCBS1H101KBY	001 103 5569 4
C369	RCBS1H102KBY	001 103 5571 0
C370	RCBS1H271KBY	001 103 5611 9
C401	ECFR1H104ZFM	001 108 0794 2
C402	ECKD1H103PF	001 103 1449 7
C403	ECFR1H104ZFM	001 108 0794 2
C404	ECEA0JU470	001 120 3125 9
C405, C406	ECKR1H103ZF5	
C407, C408	ECKR1H103ZF5	
C409	ECEA1CU100	001 120 2905 3
C410	ECCD1H220KC	001 103 0494 6
C412	ECEA1CU100	001 120 2905 3
C414	ECEA0JU101	001 120 2829 8
C415, C416	ECBS1H102KBY	001 103 3504 9
C417	ECBS1H102KBY	001 103 3504 9
C420	ECEA0JU220	001 120 4670 5
C451	ECKR1H103ZF5	
C452	ECEA1HN2R2S	001 120 0356 8
C455	ECEA1CU100	001 120 2905 3
C501	ECEV1EV330	001 120 5624 7
C502	ECEV1HV010	001 120 5625 6
C504	GR426B273K25	001 103 7125 0
C506	GR426B152K50	001 120 5626 5
C507	GR426B104Z25	
C511, C512	ECEA1EN470S	001 120 2394 4
C513	ECEA1EN470S	001 120 2394 4
C801, C802 ⚠	ARP1V332M0	001 120 5666 7
C805, C806	ARA1A470M0T	001 120 5663 0
C807, C808	ARP1V332M0	001 120 5666 7
C811, C812	ARA1A470M0T	001 120 5663 0
C813, C814	REC1E471M0	001 120 5669 4
C815, C816	ARA1H010M0T	001 120 5694 3
C817 ⚠	ECKR1H103ZF5	
C821	ECEA0JU470	001 120 3125 9
C822	ECKR1H103ZF5	
C823, C824	ARA1C331M0	001 120 5665 8
C825, C826	ARA1C331M0	001 120 5665 8
C827, C828	CQS2B391JCF	001 106 4821 0
C829, C830	CQS2B103JCD	001 106 5208 1
C831, C832	ARA1C221M0	001 120 5664 9
C833, C834	ARA1C221M0	001 120 5664 9
C835, C836	ARA1CN101M0	001 120 5643 4
C839	ECQP1102JZ	001 106 1069 0
C840, C841	RBP1CN220CT	001 120 5015 6
C851, C852	ECKD1H103PF	001 103 1449 7
C853	ECFD1H104ZF	001 108 0906 2
C854	ECEA1CU331	001 120 3200 5
C855	ECFD1H104ZF	001 108 0906 2
C856	ECEA1CU331	001 120 3200 5
C891, C892	ECQP1102JZ	001 106 1069 0

■ REPLACEMENT PARTS LIST

Notes: * Important safety notice:
Components identified by ⚠ mark have special characteristics important for safety. When replacing any of these components use only manufacturer's specified parts.
* Bracketed indications in Ref. No. columns specify the area.
Parts without these indications can be used for all areas.

Ref. No.		Part No.	Part Code	Description
INTEGRATED CIRCUITS				
IC11	⚠	AN78M05	001 060 4137 4	I.C.
IC12	⚠	AN79N05	001 060 8714 7	I.C.
IC13		AN78N12	001 060 4721 4	I.C.
IC14		AN79L12	001 060 9072 4	I.C.
IC101		AN8370S	001 060 8399 8	I.C.
IC102, IC103		AN6554NS	001 060 4860 4	I.C.
IC104		AN6552S	001 060 7386 7	I.C.
IC105		AN6914S	001 060 3298 2	I.C.
IC106		SVIUPD4053BC	001 060 4885 5	I.C.
IC301		EHDGA1243	001 061 3036 7	I.C.
IC302		MN6617S	001 061 3042 9	I.C.
IC303		MN6618A	001 061 3043 8	I.C.
IC304		MN4416S-12	001 060 9746 5	I.C.
IC331		AN6914	001 060 0297 5	I.C.
IC351, IC352		MN74HCU04S	001 061 3232 5	I.C.
IC353		MN74HC74S	001 060 7634 0	I.C.
IC354		MN74HC00S	001 060 7089 3	I.C.
IC355		AN6564NS	001 060 7085 7	I.C.
IC401		MN15261PDK	001 061 3159 7	I.C.
IC402		MN1550PDM	001 061 3230 7	I.C.
IC403		MN1280-R	001 060 8669 5	I.C.
IC501		AN8290S	001 061 3034 9	I.C.
IC601 (M, MC)		SVIBX1438M	001 061 3235 2	I.C.
IC601 EXCEPT (M, MC)		SVIBX1439E	001 061 3671 6	I.C.
IC801	⚠	AN78M15	001 060 4532 7	I.C.
IC802	⚠	AN79N15	001 060 8715 6	I.C.
IC803		AN78M15	001 060 4532 7	I.C.
IC804		AN79N15	001 060 8715 6	I.C.
IC805		AN78M12	001 060 4333 2	I.C.
IC806		AN79N12	001 060 8663 1	I.C.
IC821		MN51005PDN	001 061 3231 6	I.C.
IC822, IC823		SVIPCM54KP-M	001 061 3644 9	I.C.
IC824, IC825		SVIUPD4053BC	001 060 4885 5	I.C.
IC826, IC827		SVIM5238P	001 060 9725 0	I.C.
IC828, IC829		NJM5532DD	001 061 3161 3	I.C.
IC830, IC831		SVIAL079	001 061 3234 3	I.C.
IC851		SVINJM4556SA	001 061 0445 6	I.C.
TRANSISTORS				
Q11		2SA1309Q	001 030 4058 0	TRANSISTOR
Q12	⚠	2SD973	001 030 1944 1	TRANSISTOR
Q13	⚠	2SB793-Q,RS	001 030 2766 7	TRANSISTOR
Q101	⚠	2SD1055	001 030 4872 8	TRANSISTOR
Q102	⚠	2SB822	001 030 0781 6	TRANSISTOR
Q103	⚠	2SD1055	001 030 4872 8	TRANSISTOR
Q104	⚠	2SB822	001 030 0781 6	TRANSISTOR
Q105	⚠	2SD1055	001 030 4872 8	TRANSISTOR
Q106	⚠	2SB822	001 030 0781 6	TRANSISTOR
Q107		2SK301	001 030 2428 2	TRANSISTOR
Q108		UN4212	001 030 3019 1	TRANSISTOR
Q109		2SA1309Q	001 030 4058 0	TRANSISTOR
Q110		2SC2021	001 030 4276 2	TRANSISTOR
Q111		UN4212	001 030 3019 1	TRANSISTOR
Q301, Q331		UN4112	001 030 3018 2	TRANSISTOR
Q351		2SK301	001 030 2428 2	TRANSISTOR
Q401		UN4214	001 030 4835 3	TRANSISTOR
Q402		2SA1309Q	001 030 4058 0	TRANSISTOR
Q403, Q404		UN4214	001 030 4835 3	TRANSISTOR
Q405, Q406		2SC3311-Q	001 030 2936 7	TRANSISTOR
Q407		2SC3311-Q	001 030 2936 7	TRANSISTOR
Q408, Q409		2SA1309Q	001 030 4058 0	TRANSISTOR
Q410		2SA1309Q	001 030 4058 0	TRANSISTOR
Q411		UN4114	001 030 4832 6	TRANSISTOR
Q412		2SD638	001 030 1798 3	TRANSISTOR
Q413		2SD892	001 030 2415 7	TRANSISTOR
Q414, Q452		UN4212	001 030 3019 1	TRANSISTOR
Q453		UN4112	001 030 3018 2	TRANSISTOR
Q454		UN4214	001 030 4835 3	TRANSISTOR
Q455		UN4212	001 030 3019 1	TRANSISTOR
Q456		2SK301	001 030 2428 2	TRANSISTOR
Q457, Q458		UN4212	001 030 3019 1	TRANSISTOR
Q459, Q460		UN4112	001 030 3018 2	TRANSISTOR
Q461, Q601		UN4112	001 030 3018 2	TRANSISTOR
Q602, Q603		UN4112	001 030 3018 2	TRANSISTOR
Q604, Q605		UN4212	001 030 3019 1	TRANSISTOR
Q606, Q607		UN4212	001 030 3019 1	TRANSISTOR
Q608, Q609		UN4212	001 030 3019 1	TRANSISTOR
Q610, Q611		UN4212	001 030 3019 1	TRANSISTOR
Q612, Q613		UN4212	001 030 3019 1	TRANSISTOR
Q614, Q615		UN4212	001 030 3019 1	TRANSISTOR
Q616, Q617		UN4212	001 030 3019 1	TRANSISTOR
Q618, Q619		UN4112	001 030 3018 2	TRANSISTOR
Q821, Q822, Q891		UN4114	001 030 4832 6	TRANSISTOR
DIODES				
D11	⚠	SVDS1WB40	001 032 7473 7	RECTIFIER
D12	⚠	SVD1SR35200A	001 032 3951 4	RECTIFIER
D13		MA4082M	001 032 4955 6	DIODE
D14		MA4330L	001 032 7228 8	DIODE
D15, D16		MA4082M	001 032 4955 6	DIODE
D17, D18	⚠	SVD1SR35200A	001 032 3951 4	RECTIFIER
D101, D102		MA165	001 032 0494 0	DIODE
D103, D104		MA165	001 032 0494 0	DIODE
D105, D106		MA4082M	001 032 4955 6	DIODE
D351		MA4051-H	001 032 5891 1	DIODE
D352		MA165	001 032 0494 0	DIODE
D353		SVDKV1230Z23	001 032 9299 5	DIODE
D354, D401		MA165	001 032 0494 0	DIODE
D402, D403		MA165	001 032 0494 0	DIODE
D404, D405		MA165	001 032 0494 0	DIODE
D406, D407		MA165	001 032 0494 0	DIODE
D408, D409		MA165	001 032 0494 0	DIODE
D451		MA165	001 032 0494 0	DIODE
D501		MA153	001 032 0489 7	DIODE
D601, D602		MA165	001 032 0494 0	DIODE
D603, D604		MA165	001 032 0494 0	DIODE
D605, D606		MA165	001 032 0494 0	DIODE
D607, D608		MA165	001 032 0494 0	DIODE
D609, D610		MA165	001 032 0494 0	DIODE
D611, D612		MA165	001 032 0494 0	DIODE
D613, D614		MA165	001 032 0494 0	DIODE
D615		MA165	001 032 0494 0	DIODE
D616, D617		SVGLB74VR3HL	001 032 9300 9	LED
D618, D619		SVGLB74VR3HL	001 032 9300 9	LED
D620, D621		SVGLB74VR3HL	001 032 9300 9	LED
D622		SVGLB74MG3HL	001 032 7888 8	LED
D623		SVGLB74DU3HL	001 032 7185 2	LED
D624, D625		SVGLB74VR3HL	001 032 9300 9	LED
D626		MA165	001 032 0494 0	DIODE
D801, D802	⚠	SVDS1WBAK20	001 032 8766 3	RECTIFIER
D803, D804	⚠	SVD1SR35200A	001 032 3951 4	RECTIFIER
D805, D806		MA4054-MTA	001 032 9513 8	DIODE
D807, D808		MA4054-MTA	001 032 9513 8	DIODE
D821, D822		MA165	001 032 0494 0	DIODE
D891		MA165	001 032 0494 0	DIODE
HALL ELEMENTS				
H501, H502		0H-001	001 036 0010 2	HALL ELEMENT
VARIABLE RESISTORS				
VR101		EVND3AA00B53	001 180 2644 9	5KΩ(B)
VR102, VR103		EVND3AA00B14	001 180 2642 1	10KΩ(B)
VR104		EVND3AA00B53	001 180 2644 9	5KΩ(B)
VR105		EVND3AA00B14	001 180 2642 1	10KΩ(B)
VR106		EVND3AA00B53	001 180 2644 9	5KΩ(B)
VR301		EVND3AA00B13	001 180 3053 2	1KΩ(B)
VR601		SVSD2	003 439 2047 2	20KΩ(B)
VR851		EWANA1X05A15	001 174 8134 8	100KΩ(A)
VR901		EWTXAR27025B	001 174 8859 8	SEARCH DIAL
COILS AND TRANSFORMERS				
L1, L2 EXCEPT (M, MC)	⚠	SLQX400-D	001 210 7020 0	COIL
L101		ELEPH2R2MA	001 211 2463 2	COIL
L201, L202 (EG) ONLY		SLQDSP33R3K		COIL
L203, L204 (EG) ONLY		SLQDSP33R3K		COIL
L205, L206 (EG) ONLY		SLQDSP33R3K		COIL
L301		ELEPH3R3KA		COIL
L351		SL0D9B1-T	001 211 3312 2	COIL
L352		ELEPK1R2MA	001 211 0621 4	COIL
L353		ELEPHR33MA		COIL
L501		NL4532T100K2	001 211 3218 9	COIL
L851 (M, MC)		ELEPH1R2MA	001 210 8983 4	COIL
L851 EXCEPT (M, MC)		SLQDSP33R3K		COIL
L852 (M, MC)		ELEPH1R2MA	001 210 8983 4	COIL
L852 EXCEPT (M, MC)		SLQDSP33R3K		COIL
L853 (M, MC)		ELEPH1R2MA	001 210 8983 4	COIL
L853 EXCEPT (M, MC)		SLQDSP33R3K		COIL
T1 EXCEPT (M, MC)	⚠	SLT54JE47E	001 202 8478 2	POWER TRANSFORMER
T1 (M, MC)	⚠	SLT54JU4A	001 202 8480 8	POWER TRANSFORMER
T2 EXCEPT (M, MC)	⚠	SLT54JE53E		POWER TRANSFORMER
T2 (M, MC)	⚠	SLT54JU3A	001 202 8479 1	POWER TRANSFORMER
COMPONENT COMBINATIONS				
C20, C21	⚠	RXAF103Z22EY	001 230 0547 0	0.01μF X 2
C803, C804	⚠	RXAF103Z22EY	001 230 0547 0	0.01μF X 2
C809, C810	⚠	RXAF103Z22EY	001 230 0547 0	0.01μF X 2
OSCILLATORS				
X351		SVQ16CKSS	001 250 1471 7	16.9344MHZ
DISPLAYS				
FL601		SADD4	001 080 0329 2	DISPLAY
FUSES				
F1 (M, MC)	⚠	XBA1F08NU14	002 380 0307 9	125V, 800mA
F1 EXCEPT (M, MC)	⚠	XBA2C04TB0S		250V, T400mA
F2 EXCEPT (M, MC)	⚠	XBA2C016TB0S	002 380 1470 5	250V, T160mA
SWITCHES				
S1	⚠	ESB8249V	003 435 5877 0	POWER
S2 EXCEPT (M, MC)	⚠	SRDSHXW0251	003 438 1067 7	VOLTAGE SELECTOR
S101	⚠	SSPD4-1	003 434 1042 6	OPEN/CLOSE DET.
S601, S602		EVQQS405K	003 435 2832 5	OPERATION
S603, S604		EVQQS405K	003 435 2832 5	OPERATION
S605, S606		EVQQS405K	003 435 2832 5	OPERATION
S607, S608		EVQQS405K	003 435 2832 5	OPERATION
S609, S610		EVQQS405K	003 435 2832 5	OPERATION
S611, S612		EVQQS405K	003 435 2832 5	OPERATION
S613, S614		EVQQS405K	003 435 2832 5	OPERATION
S615, S616		EVQQS405K	003 435 2832 5	OPERATION
S617, S618		EVQQS405K	003 435 2832 5	OPERATION
S619, S620		EVQQS405K	003 435 2832 5	OPERATION
S621, S622		EVQQS405K	003 435 2832 5	OPERATION
S623, S624		EVQQS405K	003 435 2832 5	OPERATION
S625, S626		EVQQS405K	003 435 2832 5	OPERATION
S627		EVQQS405K	003 435 2832 5	OPERATION
S628, S629		ESB6471	003 435 4986 0	OPERATION
S630, S631		ESB6471	003 435 4986 0	OPERATION
RELAYS				
RLY801, RLY802		SFDYG5A237P	003 450 2713 4	RELAY
RLY891		SFDYG5A237P	003 450 2713 4	RELAY

Ref. No.	Part No.	Part Code	Description
FRONT PANEL			
1	SGWLP1200-KM	016 840 7149 5	FRONT PANEL ASS'Y
1-1	SHRD58	016 652 0664 7	CORD CLAMPER
2	SKKLP1200-KM	016 840 7215 2	PANEL ASS'Y
2-1	SGUD120	016 842 1506 8	PANEL
2-2	SHGLP1200-KM	016 653 1130 3	RUBBER ASS'Y
3	SUXD33	016 634 0134 0	SHAFT
4	SUSD37-1	016 726 0857 1	SPRING
5	SMND8	016 632 1831 8	FRAME, OPEN BUTTON
6	SHGD81	016 653 1098 6	RUBBER
7	SBCD2330MB0A	016 702 6772 3	OPEN BUTTON
8	SUSD53-1	016 726 0863 3	SPRING
9	SUSD36-1	016 726 0872 2	SPRING
10	SUWD37-1	016 650 5288 1	PLATE
11	SDGD9-1	016 745 0209 0	HOOK
12	SSED8	003 439 2082 9	TERMINAL, OPEN/CLOSE DET.
13	SUWLP1200KM1	016 650 5290 7	CLAMPING PLATE ASS'Y
13-1	SHGD80	016 653 1099 5	RUBBER
14	SDGD26	016 745 0205 4	GEAR
15	SUWD33	016 650 5270 1	BRACKET
16	SHRD36	016 652 0653 0	GEAR
17	SBZLP1200-KM	016 630 1774 0	OPERATION BASE ASS'Y
18	SRDJHLJ15401	003 400 6583 0	HEADPHONES JACK
19	SGXD1341ZK0A	016 846 3604 9	PANEL
20	SHRD25	016 652 0651 2	SPACER
21	SBDD40MB0A	016 700 1927 2	KNOB, HEADPHONES VOLUME
22	SBDD8-1	016 700 1934 3	KNOB, PITCH CONTROL
23	SBND10MB0A	016 700 1940 5	DIAL, SEARCH
24	SBCD2320MB0A	016 702 6774 1	BUTTON
25	SBCD2300MB0A	016 702 6783 0	BUTTON
26	SBCD400	016 702 6812 2	BUTTON
27	SUWD50-1	016 650 5276 5	PLATE
28	SUWLP1200-KM	016 650 5283 6	DISPLAY PANEL ASS'Y
30	SGXD1330ZK0A	016 846 3527 5	FRAME, POWER SWITCH
31	SRKT015N26	017 702 0066 8	BUTTON, POWER SWITCH
32	SHWD11	016 643 0996 1	SPACER
33	SGUD118	016 842 1507 7	FILTER
36	SJQD1-2	003 455 0376 4	PLUNGER
SCREWS, WASHERS AND NUTS			
N1	XYN2+C5	005 500 1291 6	SCREW
N2	XTV3+6JFZ	005 501 0890 8	SCREW
N3	XQN2+AF4FZ	005 500 7761 3	SCREW
N4	XUC3FY	005 512 0137 3	E-RING
N5	XYN3+E6	005 503 0595 2	SCREW
N6	XTV3+8GFR	005 501 4635 5	SCREW
N7	XQN23+CJ4FZ	005 500 7762 2	SCREW
N8	XSN2+3FZ	005 500 7763 1	SCREW
N9	XWA2BFZ	005 513 1234 4	WASHER
N10	XTV3+8JFZ	005 501 0919 2	SCREW
N11	XTW3+8QFZ	005 501 3305 4	SCREW
N12	XTV3+8G	005 501 0913 8	SCREW
N13	SRXG016N01	005 500 5657 0	SCREW
N14	XTV3+14JFZ	005 501 4633 7	SCREW
N16	XTW3+8TFZ	005 501 2926 5	SCREW
N20	SNE2125-1	005 500 5752 2	SCREW

Ref. No.	Part No.	Part Code	Description
CABINET AND CHASSIS			
41	SKUD7	016 802 2056 3	BOTTOM BOARD
42	SGXD1320ZY0A	016 846 3569 5	RUBBER
43	SGXD1310ZY0A	016 846 3570 2	RUBBER
44	SGXD1300ZY0A	016 846 3571 1	RUBBER
47	SKLD2-Z	016 828 0317 7	INSULATOR ASS'Y
48	SKUD8	016 802 2055 4	BOTTOM COVER
49	SMLD3-1	016 601 0579 8	CUSHION RUBBER
50	SHRD39	016 652 0660 1	SPACER
51	SHRD33	016 652 0652 1	SUPPORTER, P.C.BOARD
52	SHE185	016 918 0330 9	SPACER
53 (M)	SGPD500KY1A	016 840 7181 5	REAR PANEL
53 (E)	SGPD500KY2A	016 840 7193 1	REAR PANEL
53 (XA)	SGPD500KY3A	016 840 7192 2	REAR PANEL
53 (EG)	SGPLP1200KEG	016 840 7234 9	REAR PANEL
53 (EK)	SGPLP1200KEK	016 840 7290 1	REAR PANEL ASS'Y
53 (MC)	SGPLP1200KMC	016 840 7289 4	REAR PANEL ASS'Y
53 (PA, PE, PC)	SGPLP1200KPA	016 840 7291 0	REAR PANEL ASS'Y
53 (XL, EB, EH) (EF, EI, XB)	SGPLP1200KXL	016 840 7292 9	REAR PANEL ASS'Y
54	SJS6805	003 400 1689 1	SOCKET (8 PIN)
55	SJS6401	003 403 6359 1	SOCKET (5 PIN)
56	SJFD5	003 410 7771 8	LINE OUT TERMINAL
57 (XA, PA, PE) (PC)	RHR111	015 645 0221 9	SPACER, AC CORD
57 EXCEPT (XA) (PA, PE, PC)	SHR127	016 645 0037 9	SPACER, AC CORD
58 ⚠ (EK)	QFC1205M	003 490 0928 5	AC CORD
58 ⚠ (XA, PA, PE) (PC)	RJA52Y	003 490 3914 9	AC CORD
58 ⚠ (XL)	SJAG23	003 490 1056 4	AC CORD
58 ⚠ (E, EG, EB, EH) (EF, EI)	SJA138-3	003 490 2575 2	AC CORD
58 ⚠ (M, MC)	SJA174	003 490 4312 5	AC CORD
58 ⚠ (XB)	SJA182	003 490 5035 3	AC CORD
60	SHGD61	016 653 1107 2	SPACER
61	SHRD62	016 652 0704 6	CORD CLAMPER
SCREWS, WASHERS AND NUTS			
N1	XTW4+14QFZ	005 501 4636 4	SCREW
N2	XTV3+14GFZ	005 501 1144 1	SCREW
N3	XTBS3+8FFZ	005 501 3429 3	SCREW
N4	SRXG016N01	005 500 5657 0	SCREW
N5	XTV3+16JFR	005 501 4634 6	SCREW
N6	SNSD17	016 643 0984 5	SCREW
N7	XSB4+25FZ	005 500 7168 4	SCREW
N8	SNWD6-1	016 643 0982 7	WASHER
N9	XTW3+8TFZ	005 501 2926 5	SCREW
N10	XTW3+8TFR	005 501 2602 2	SCREW

Ref. No.	Part No.	Part Code	Description
TRAVERS DECK			
1	SIRLP1200-KM	016 632 1819 4	DISC TRAY ASS'Y
1-1	SHSD15	016 643 0985 4	SHEET
2	SUWLP1200KM2	016 650 5291 6	BASE ASS'Y
3	SIRLP1200KM1	016 652 0675 4	CLAMPER ASS'Y
3-1	SRGC007N04	017 653 0358 1	RUBBER
4	SOMLP1200-KM	003 453 0338 0	MAGNET ASS'Y
5	SRUP050N46	017 745 0087 4	PLATE
6	SUXD30	016 641 0256 0	SHAFT
7	SUXD31	016 641 0255 1	SHAFT
8	SUSD40	016 726 0874 0	SPRING
9	SUWD45-1	016 650 5315 5	SPACER
10	SHWD13	016 643 0995 2	SPACER
11 ⚠	SOALP1200-KM	001 271 0692 3	OPTICAL PICKUP ASS'Y
12	EWS7BKA00Q53	001 230 2544 5	RESISTANCE UNIT
13	SUXD25	016 634 0124 2	SHAFT
14	SUXD39	016 634 0137 7	SHAFT
15	SHRD40	016 652 0670 9	SPACER
16	SHGD47	016 653 1070 8	SPACER
17	EWSL04A00000	016 631 0044 6	HOLDER
18	SORD10E	001 211 3219 8	COIL
19	SOYD9	016 634 0125 1	YOKE
20	SOYD8E	016 634 0128 8	YOKE
21	SISD9	016 630 1778 6	TRAVERSE BASE
22	SDMLP1200-KM	016 740 0118 7	ROTOR ASS'Y
23	SDOD14-E	016 766 0210 0	TURNTABLE
24	SRQA010N04	017 726 0412 8	SPRING
25	SDOD15	016 745 0208 1	RING
26	SGXLP1200-KM	016 846 3556 0	TRAVERSE BASE COVER ASS'Y
27	SHRD41	016 652 0677 2	LOCK SHAFT
28	SHRD42	016 652 0668 3	KNOB, LOCK SHAFT
29	SHGD53	016 653 1090 4	CUSHION RUBBER
30	SHRD3	016 652 0559 7	SPRING HOLDER
31	SXPD830	003 483 1207 8	SPINDLE P.C.B
32	SDWD2	016 846 3479 6	SPACER
33	SUSD39-1	016 726 0858 0	SPRING (GOLD)
34	SUSD54-1	016 726 0861 5	SPRING (SILVER)
35	SUSD55-1	016 726 0862 4	SPRING (BLACK)
36	SUSD56-1	016 726 0865 1	SPRING (RED)
SCREWS,WASHERS AND NUTS			
N1	XYN2+C4	005 503 0548 9	SCREW
N2	XTW3+8TFZ	005 501 2926 5	SCREW
N3	XTV3+12JFZ	005 501 0847 1	SCREW
N4	XTN23+4GFZ	005 501 4631 9	SCREW
N5	XTV3+8JFZ	005 501 0919 2	SCREW
N6	XUC2FT	005 512 0126 6	E-RING
N7	XUC3FY	005 512 0137 3	E-RING
N8	SFXGQ06N01	005 500 4983 3	SCREW
N9	SNSD10	005 500 5675 8	SCREW
N10	XQN17+A6	005 500 4900 2	SCREW
N11	XYN2+C4	005 503 0548 9	SCREW
N12	XTV3+10G	005 501 0826 6	SCREW
N13	XTV3+6BFN	005 501 0888 2	SCREW
N14	XXE26D5	005 500 5095 2	SCREW
N15	XTN2+4G	005 501 2780 5	SCREW
N16	SNSD9	016 726 0765 4	SCREW
N17	XTV3+14G	005 501 0851 5	SCREW
N18	XNG26H	005 507 1598 5	NUT
N19	XWE3AB	005 513 4815 7	WASHER
N20	XTN23+6G	005 501 4632 8	SCREW
N21	SHWD13	016 643 0995 2	SPACER

Ref. No.	Part No.	Part Code	Description
PACKINGS			
P1 (EF)	SPND174	016 971 4879 0	CARTON BOX
P1 EXCEPT (MC, EF)	SPND89	016 971 4718 6	CARTON BOX
P1 (MC)	SPND90	016 971 4786 4	CARTON BOX
P2	SPSD57	016 977 3093 0	PAD
P3	SPSD58	016 977 3094 9	PAD
P4	XZB60X65A01	016 978 0510 1	POLYETHYLEN BAG
P5	SRHZJ02N01	017 978 0097 5	PROTECTION COVER
P6	SFYF23A35	017 978 0084 0	POLYETHYLENE BAG
P8	SPSD14	016 977 2843 0	PROTECTION SHEET
ACCESSORIES			
A1 (EK)	SQUD114	016 983 4879 4	INSTRUCTION BOOK
A1 (EI)	SQUD115	016 983 4918 4	INSTRUCTION BOOK
A1 (M)	SQUD149	016 983 4862 3	INSTRUCTION BOOK
A1 (XL, EF, EG) (XA)	SQUD151-1	016 983 4975 5	INSTRUCTION BOOK
A1 (E, EB, EH)	SQULP1200-KE	016 983 4877 6	INSTRUCTION BOOK
A1 (MC)	SQULP1200KMC	016 983 4860 5	INSTRUCTION BOOK
A1 (PA, PE, PC)	SQULP1200KPA	016 983 4917 5	INSTRUCTION BOOK
A1 (XB)	SQULP1200KXB	016 983 4916 6	INSTRUCTION BOOK
A2	SFDHM03N02	003 492 5453 9	LINE OUT CORD
A3 ⚠ (XA, PA, PE) (PC, XB) ONLY	RJP120ZBS-H	003 402 1437 9	PLUG
A4 EXCEPT (M, MC)	UM-3NE		BATTERY
A4 (M, MC)	UM-3NEP		BATTERY

Ref. No.	Part No.	Part Code	Description
INTEGRATED CIRCUITS			
IC1001 EXCEPT (M, MC)	MN6030B	001 060 6133 0	I.C.
IC1001 (M, MC)	MN6030CA	001 060 8758 5	I.C.
TRANSISTORS			
Q1001	UN1231	001 030 5092 4	TRANSISTOR
DIODES			
D1001	LN66-S	001 032 3730 5	LED
D1002, D1003	MA154WK	001 032 3491 1	DIODE
D1004, D1005	MA154WK	001 032 3491 1	DIODE
D1006, D1007	MA154WA	001 032 3490 2	DIODE
OSCILLATOR			
X1001 EXCEPT (M, MC)	CSB420PB1	001 030 0013 9	420 KHZ
X1001 (M, MC)	CSB455EB1	001 241 0002 7	455KHZ
RESISTORS			
R1001	ERDS2TJ1R0	001 152 2419 4	CARBON, 1/4W, 1Ω
CAPACITORS			
C1001 (M, MC)	ECKD1H101KB	001 103 1412 0	CERAMIC, 50V, 100PF
C1001	ECKD1H471KB	001 103 1551 0	CERAMIC, 50V, 470PF
EXCEPT (M, MC)			
C1002 (M, MC)	ECKD1H101KB	001 103 1412 0	CERAMIC, 50V, 100PF
C1002 EXCEPT (M, MC)	ECKD1H121KB	001 103 1455 9	CERAMIC, 50V, 120PF
C1003	ECEA0JK101	001 120 0136 8	ELECTROLYTIC, 6.3V, 100㎌
REMOTE CONTROL TRANSMITTER			
101	UR64PP259	016 840 7312 2	PANEL
102	UR64CS119C	016 802 2114 0	TOP COVER
103	UR64SB125	016 861 2468 6	PLATE
104	UR64BT123A	016 702 6323 4	BUTTON
105	UR64CT122	016 653 1011 9	RUBBER, SWITCH
106	UR64CS120C	016 802 2113 1	BOTTOM COVER
107 (M, MC)	URLJLB126BN	016 862 1069 6	LABEL
107 EXCEPT (M, MC)	UR64LB126BP	016 862 1068 7	LABEL
108	UR64EC121C	016 820 0589 5	BATTERY COVER
109	UR64TD127	003 413 1407 4	TERMINAL ⊕
110	UR64TD128	003 413 1408 3	TERMINAL ⊖
111	UR52TD101	003 413 1406 5	TERMINAL
SCREWS,WASHERS AND NUTS			
N100	XTS26+12GFZ	005 501 3122 9	SCREW

■ EXPLODED VIEWS

• **Front panel parts**

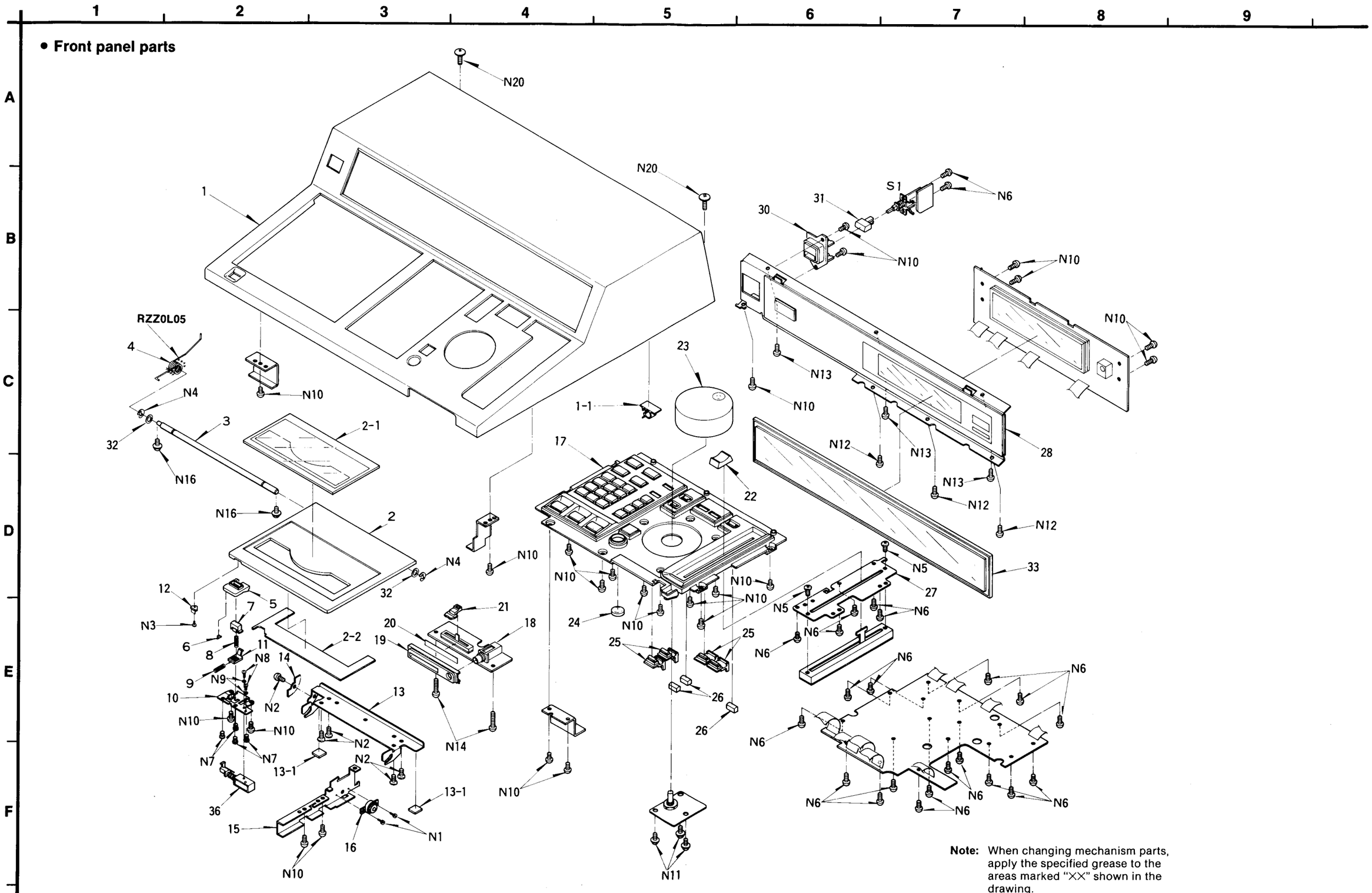

Note: When changing mechanism parts, apply the specified grease to the areas marked "XX" shown in the drawing.

• **Chassis parts**

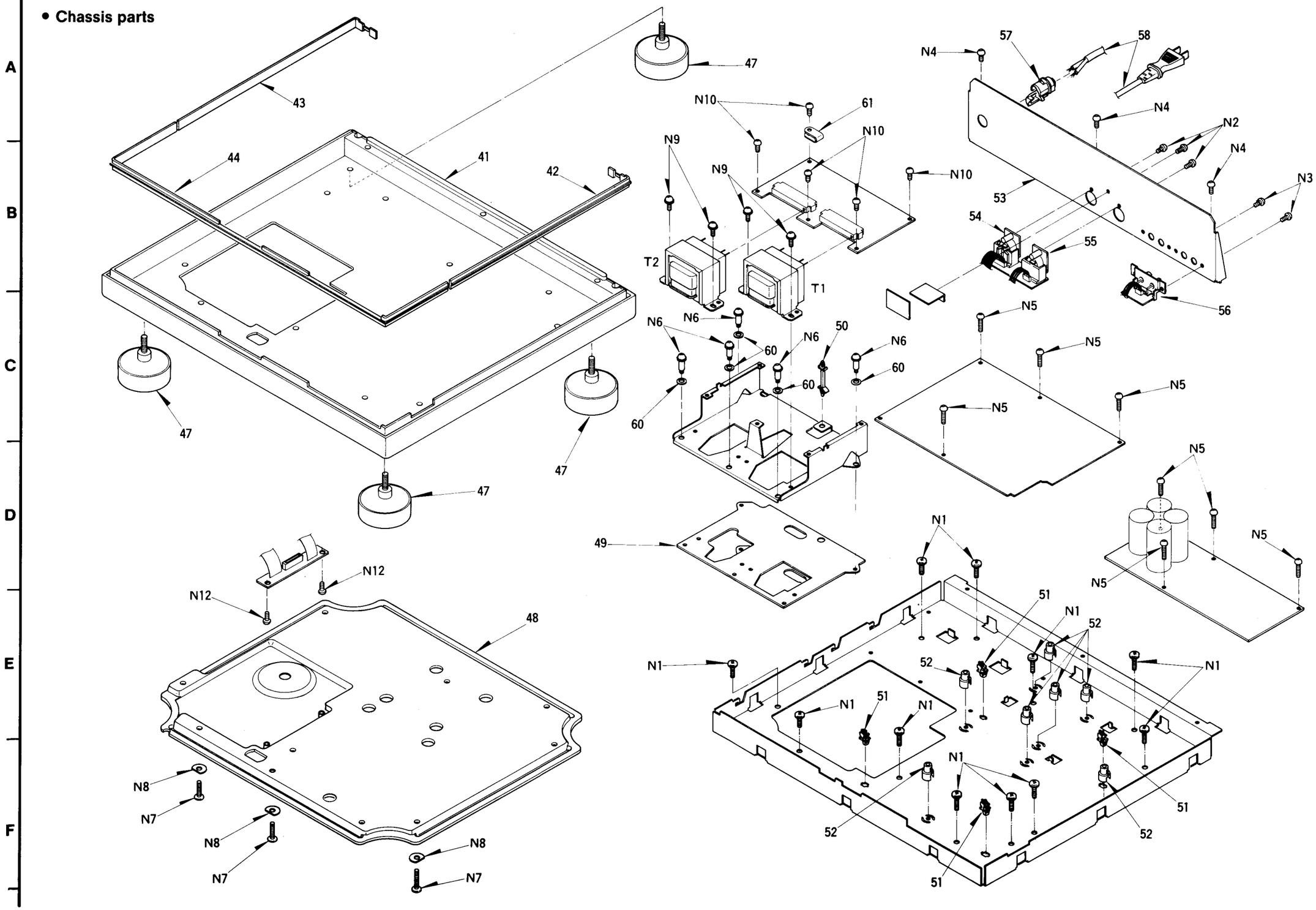

• Traverse deck parts

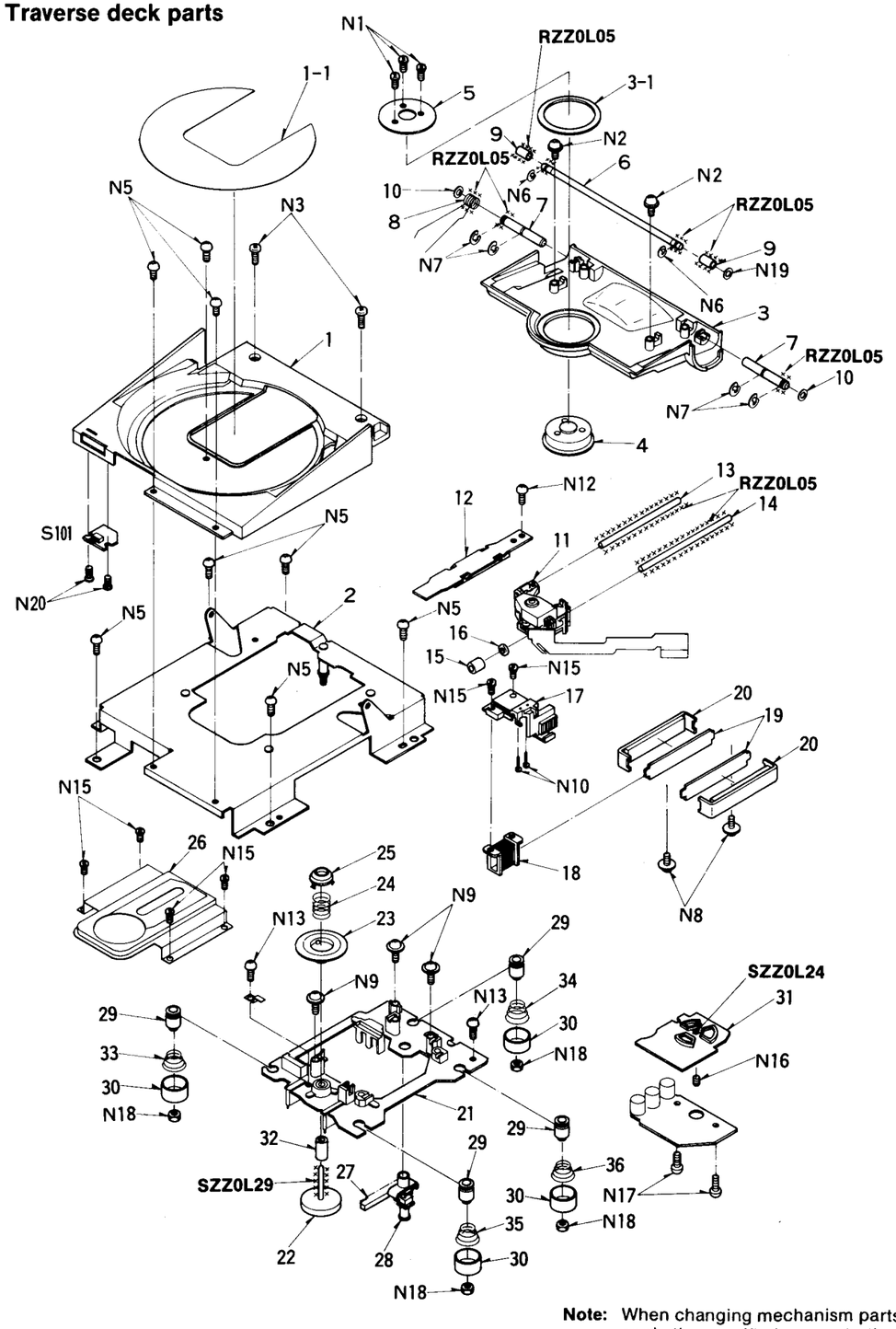

Note: When changing mechanism parts, apply the specified grease to the areas marked "XX" shown in the drawing.

• Remote control parts

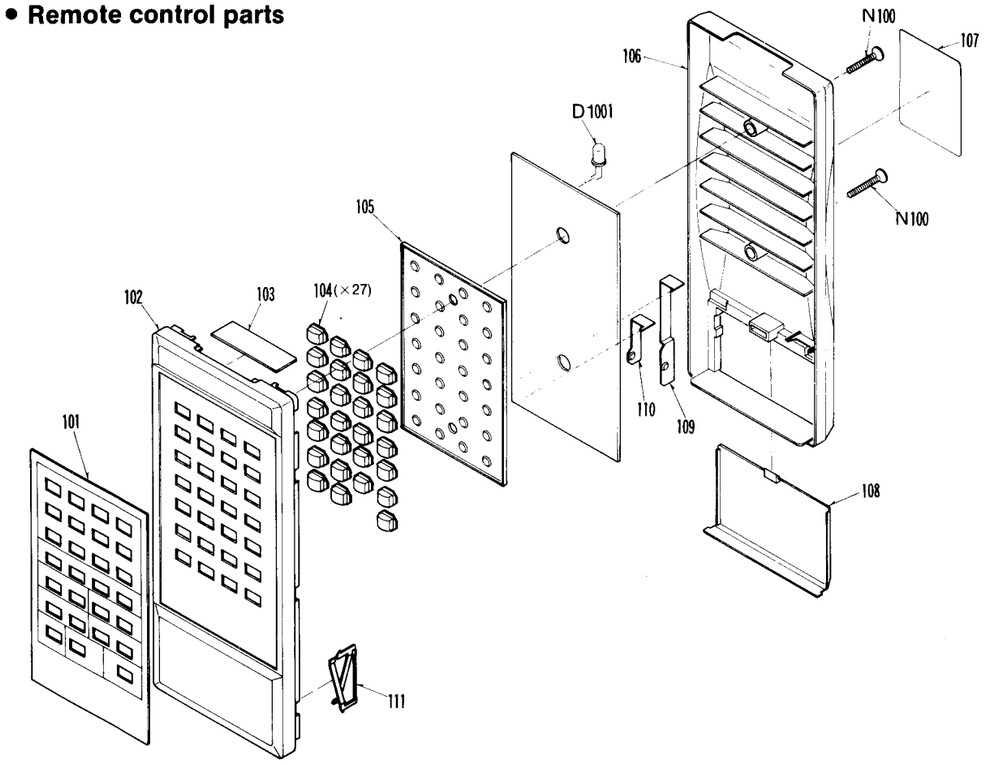

■ PACKING

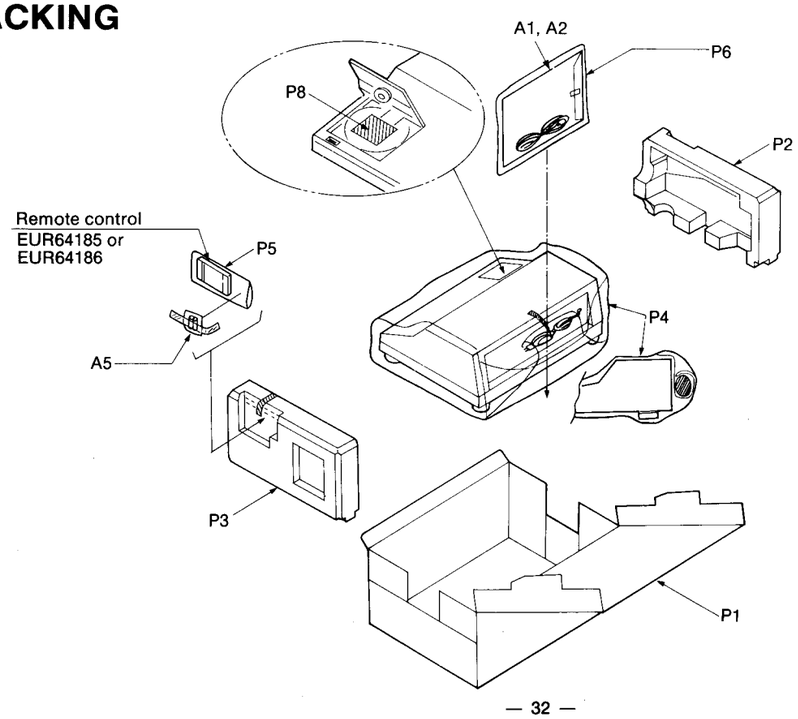

■ HOW TO REPLACE IC'S (Small outline type)

	Replacing procedure		Cautions
1	Reduce the amount of solder on each pin of the integrated circuit by use of a solder sucker.	(Example) H–130 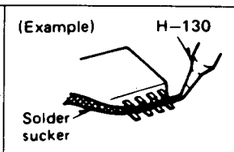	• Recommended tool .....Special soldering iron * H605M and H-130. * H605E and H-130. • Do not touch the soldering iron to the area for a long time. It may otherwise cause removal of the print foil. • When shifting the pin upward, do the job quickly while the solder is melting. If the solder is hard, it may cause removal or breakage of the print foil. • When using a pencil type soldering iron. 1. Completely remove the solder from each IC pin by use of solder sucker. 2. Raise each pin by means of an eyeleteer, hold the pliers then remove IC package from P.C.B.
2	Melt the solder on the pin (one electrode) with the soldering iron.		
3	While the solder is melting, shift the pin upward by the soldering iron to remove it from the foil.	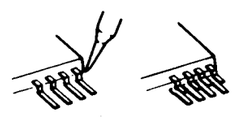	
4	Remove each pin from the foil according to the above-mentioned procedure.	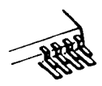	

*** Special soldering iron**

(Refer to Technical Information, ORDER NO. GAD84125486T1)...For U.S.A. and Canada

(Refer to Technical Information, ORDER NO. GAD84115476T8)...For others

•H–605 Spot Heater (hot-air solder iron)

This device that uses hot air to melt solder was developed to remove Flat-Package ICs, RHCs and chip parts.

- H–605M (For 120V power source)
- H–605E (For 200V/220V/240V power source)

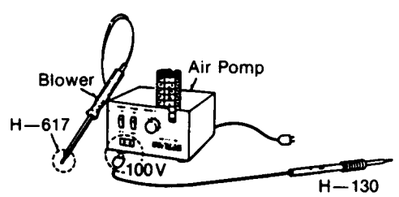

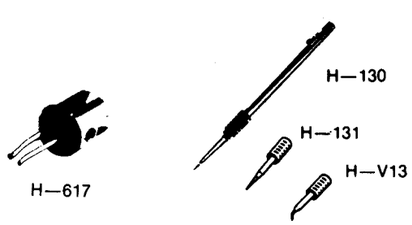

•H–617 Twin Nozzle (for spot heater)

Special nozzle for the removal of RHCs and chip resistors. (Nozzle diameter: 1.0mm×2)

•H–130 Slim Pencil Solder Iron

An ultrasmall ceramic heater solder iron is extremely handy for soldering chip parts, RHCs, ICs etc., to high-density circuit boards.

Features:

- Rated power: 100V, 15W
- Max. temp.: 400°C
- Heater: ceramic (long life)
- Insulation resistance: 100MΩ
- Length: 178mm
- Weight: 16g (not including cord)

•H–131, H–V13 Cap Bits

Solder tip for the slim pencil Solder Iron is composed of a bit holder and a corrosion resistance solder tip. Permits changing of solder tips even while still hot.

- Solder tip: 0.3mm

■ MEASUREMENTS AND ADJUSTMENTS

Caution:
It is very dangerous to look at or touch the laser beam. (Laser radiation is invisible.) With the unit turned "on", laser radiation is emitted from the pick-up lens. Be careful during adjustments in particular.

• Line out P.C.B.

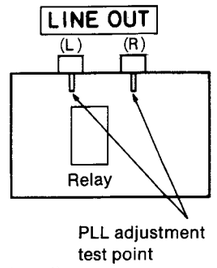

ADJUSTMENT POINTS

• Main P.C.B.

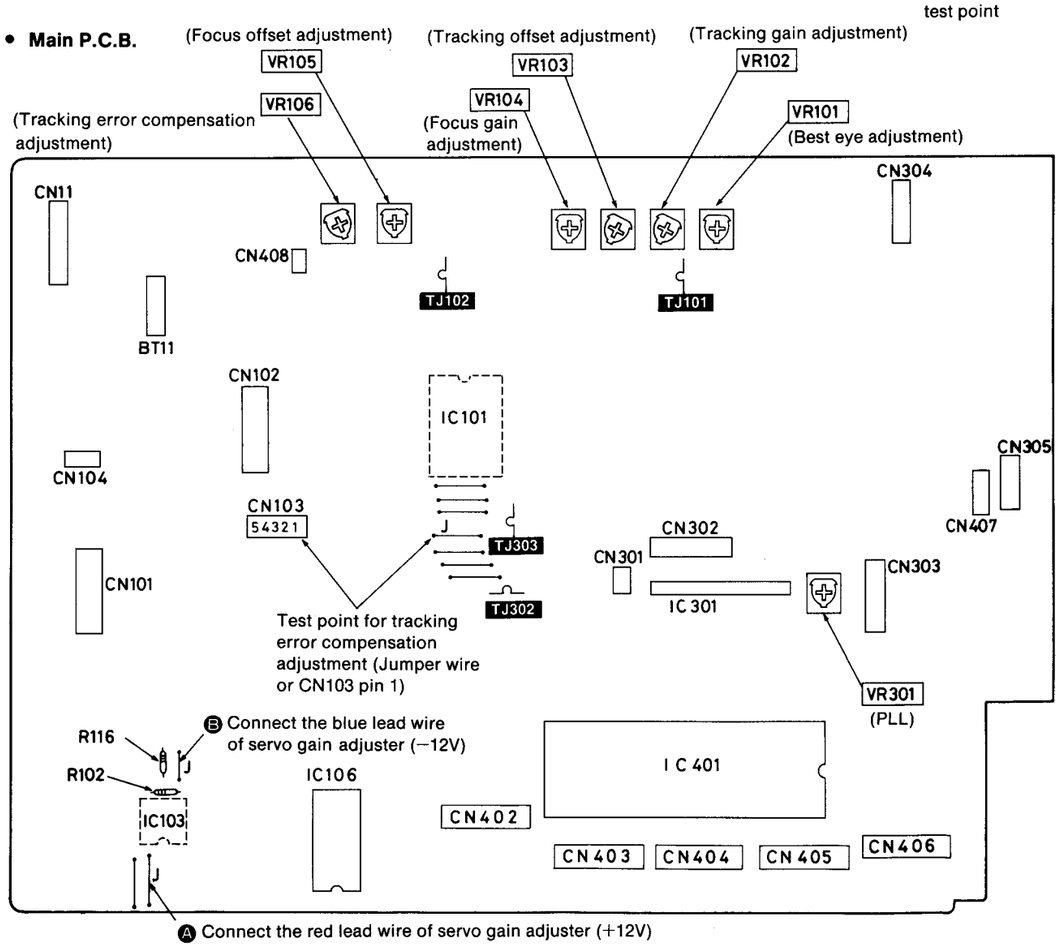

TEMPORARY SETTING OF EACH VR

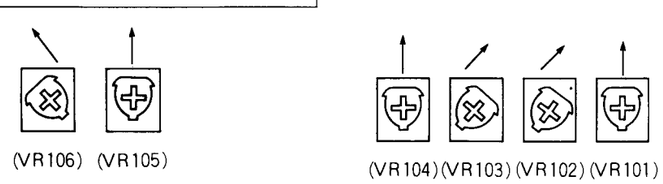

ELECTRICAL ADJUSTMENT

Equipment used

- **Servo gain adjuster (SZZP1017F)**
- **Test discs:**
  - **Test disc (SZZP1014F)**
  - **Inspection test disc (SZZP1054C)**
  - **Uneven disc (SZZP1056C)**
  - **Black band disc (SZZP1057C)**
- **Ordinary disc**
- **Two-channel oscilloscope (with trigger) of 30 MHz or over**
- **Low-frequency oscillator**
- **Conversion connector (SZZP1032F)**

Adjustment Procedure

Step 1: Remove the front panel.	..... Page 16	**Step 7:** Temporary adjustment of focus and tracking offset ..... Page 37
Step 2: Connect the servo gain adjuster.	..... Page 35	**Step 8:** Focus offset adjustment ..... Page 37
Step 3: Temporary setting of each VR.	..... Page 34	**Step 9:** Tracking offset adjustment ..... Page 38
Step 4: Best eye (PD balance) adjustment	..... Page 36	**Step 10:** Tracking error compensation adjustment ..... Page 38
Step 5: Focus gain adjustment	..... Page 36	**Step 11:** PLL adjustment ..... Page 38
Step 6: Tracking gain adjustment	..... Page 36	**Step 12:** Check of play operation after adjustment ..... Page 39

Servo Gain Adjuster and Its Connection

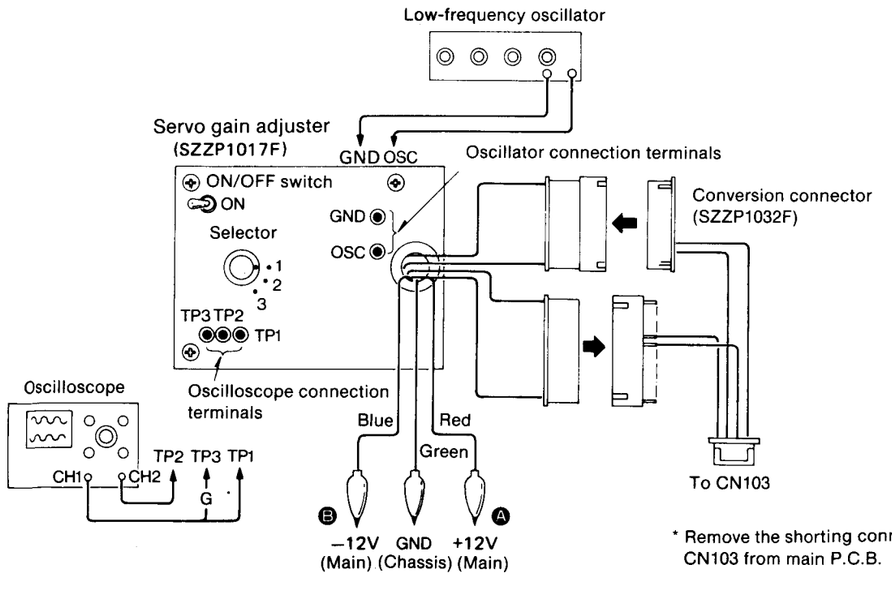

BEST EYE (PD BALANCE) ADJUSTMENT

1. Connect CH1 of the oscilloscope to **TJ302** (+) and **TJ303** (−) of the main P.C.B.
   Oscilloscope setting: VOLT .....500 mV
   SWEEP .....0.5 μsec.
   INPUT .....AC
2. Turn "**on**" the power switch and play the **0.5 mm black spot** of the test disc (SZZP1014F or SZZP1054C).
3. Adjust **VR101** so that the eye pattern of the RF signal is widest open.

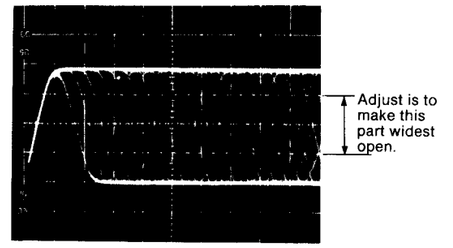

FOCUS GAIN ADJUSTMENT

1. Adjust the low-frequency oscillator to **750 Hz** frequency and **150 mVp-p** output voltage, and connect it to **OSC** and **GND** of servo gain adjuster.
2. Connect CH1 and CH2 of the oscilloscope to **TP1** and **TP2** of the servo gain adjuster (**TP3 to ground**).
   Oscilloscope setting: VOLT .....100 mV
   (both channels)
   SWEEP .....1 msec.
   INPUT .....DC
3. Set the servo gain selector switch to "**2**".
   (Set the ON-OFF switch to "**on**".)
4. Turn "**on**" the power switch and play the test disc (SZZP1014F or SZZP1054F).
5. With the selector set to "**1**" a 750 Hz signal appears on the oscilloscope. Then adjust **VR104** so that the waveform amplitudes on both channels are equal to each other.

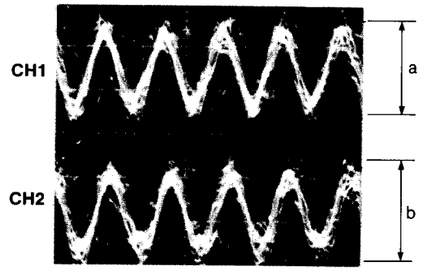

* Make a=b

TRACKING GAIN ADJUSTMENT

1. Adjust the low-frequency oscillator to **1.2 kHz** frequency and **150 mVp-p** output voltage. Connect to **OSC** and **GND** of servo gain adjuster.
2. Connect CH1 and CH2 of the oscilloscope to TP1 and TP2 of the servo gain adjuster (TP3 to ground).
   Oscilloscope setting: VOLT .....100 mV
   (both channels)
   SWEEP .....1 msec.
   INPUT .....DC
3. Set the servo gain selector switch to "**2**".
   (Set the ON-OFF switch to "**on**".)
4. Turn "**on**" the power switch and play the test disc (SZZP1014F or SZZP1054C).
5. With the selector set to "**3**", a 1.2 kHz signal appears on the oscilloscope. Then adjust **VR102** so that the waveform amplitudes on both channels are equal to each other.
6. The servo gain adjuster is not necessary for other adjustments, so discount the adjuster, **and insert the short connector of CN103 to the original position.**

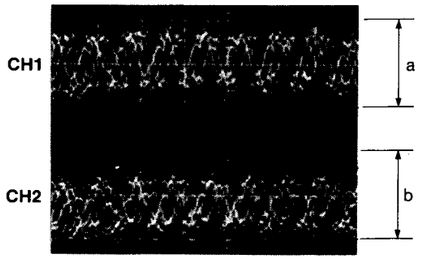

* Make a=b

TEMPORARY ADJUSTMENT OF FOCUS AND TRACKING OFFSET

(Temporary adjustment of focus offset)

1. Connect CH1 of the oscilloscope to **TJ102** (+) and **chassis** (−) of the main P.C.B.
   Oscilloscope setting:
   VOLT .....100 mV
   SWEEP .....5 msec.
   INPUT .....DC
2. Turn "**on**" the power switch and play the test disc (SZZP1057C).
3. After reading TOC, set the mode to "**stop**".
4. Adjust **VR105** so that the DC level shown on the oscilloscope is at the **ground level (0 V)**.

(Temporary adjustment of tracking offset)

1. Connect CH1 of the oscilloscope to **TJ101** (+) and **chassis** (−) of the main P.C.B.
   Oscilloscope setting:
   VOLT .....100 mV
   SWEEP .....5 msec.
   INPUT .....DC
2. Turn "**on**" the power switch and play the test disc (SZZP1057C).
3. After reading TOC, set the mode to "**stop**".
4. Adjust **VR103** so that the DC level shown on the oscilloscope is at the **ground level (0V)**.

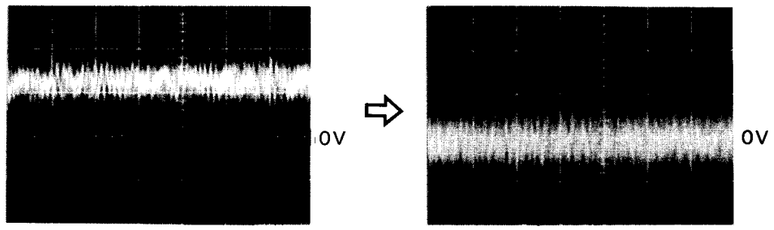

FOCUS OFFSET ADJUSTMENT

1. Connect CH1 of the oscilloscope to **TJ302** (+) and **TJ303** (−) of the main P.C.B. Connect CH2 to **TJ102** (+) and **TJ303** (−).
   Oscilloscope setting: VOLT .....500 mV (CH1)
   100 mV (CH2)
   SWEEP .....0.5 msec.
   INPUT .....AC (CH1)
   DC (CH2)
   MODE .....NORM (Trigger on CH1)
2. Turn "**on**" the power and play **Track No. 9** (0.5 mm black spot)of the test disc (SZZP1057C).
3. Trigger so that the waveform as shown appears on the oscilloscope, and adjust **VR105** to minimize the RF depression on CH1 and the wave amplitude on CH2.

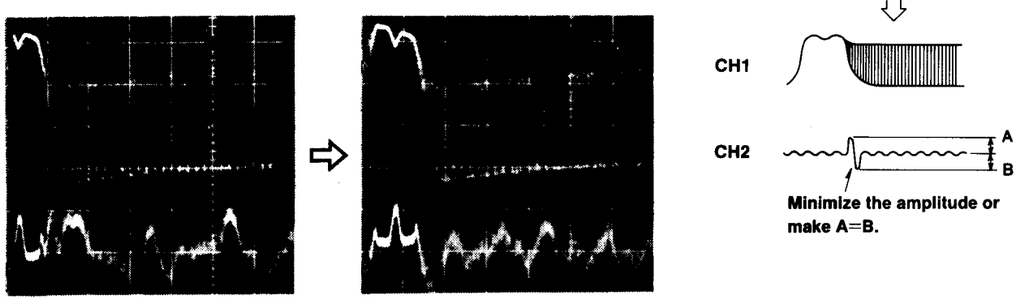

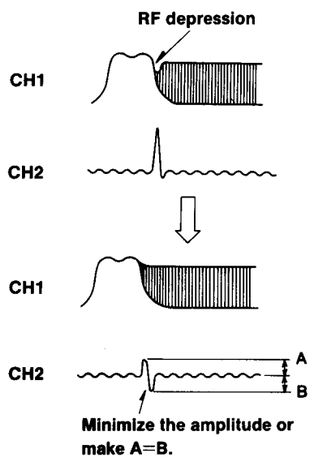

TRACKING OFFSET ADJUSTMENT

1. Connect CH1 of the oscilloscope to **TJ302** (+) and **TJ303** of the main P.C.B. Connect CH2 to **TJ101** and **TJ303**.
   Oscilloscope setting: VOLT .....500 mV (CH1)
   100 mV (CH2)
   SWEEP .....0.5 msec.
   INPUT .....AC (CH1)
   DC (CH2)
   MODE .....NORM (Trigger on CH1)
2. Turn "**on**" the power and play **Track No. 9** (0.5 mm black spot) of the test disc (SZZP1057C).
3. Trigger so that the waveform as shown appears on the oscilloscope, and adjust **VR103** to minimize the RF depression on CH1 and the wave amplitude on CH2.

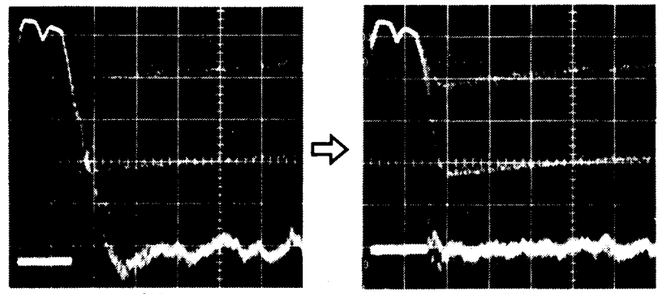

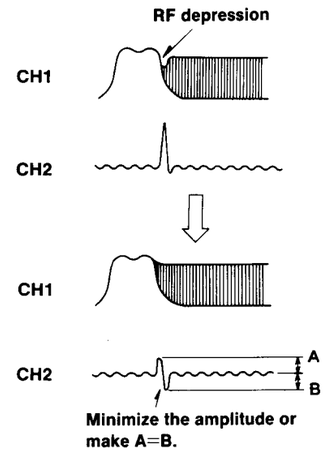

TRACKING ERROR COMPENSATION ADJUSTMENT

1. Connect CH1 of the oscilloscope to the tracking error compensation test point (+) and chassis (−)
   Oscilloscope setting: VOLT .....500 mV
   SWEEP.... 1 msec.
   INPUT .... DC
2. Turn "**on**" the power switch and play **Track No. 1** of the test disc (SZZP1014F or SZZP1054C).
3. Check the waveform on the oscilloscope and adjust **VR106** so that the waveform at DC level is **0±5 mV**.

PLL ADJUSTMENT

1. Connect CH1 of the oscilloscope to the **line out terminal** (+) and **chassis** (−).
   Oscilloscope setting: VOLT .....1 V
   SWEEP .....1 msec.
   INPUT .....DC
2. Turn "**on**" the power and play **Track No. 7** (0.5 mm black spot) of the test disc (SZZP1054C).
3. Adjust **VR301** while observing the oscilloscope and set it in the middle of the range where the waveform is stable.
   Ⓐ Slowly turn VR301 clockwise and observe the point at which the waveform on the oscilloscope begins to be disturbed as shown in NG.
   Ⓑ Slowly turn VR301 counterclockwise and observe the point at which the waveform on the oscilloscope begins to be disturbed.
   Ⓒ Set VR301 in the middle between the points observed in above 2 steps "Ⓐ and Ⓑ".

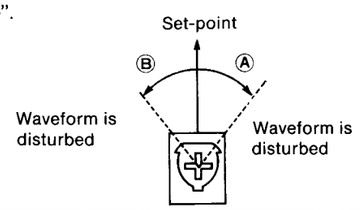

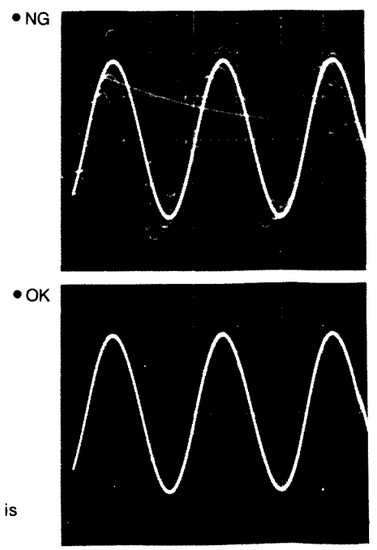

MC-Service

CHECK OF PLAY OPERATION AFTER ADJUSTMENT

- **Skip search check**

1. Play an ordinary disc.
2. Push the skip button to check the skip search (both in forward and reverse modes).

- **Manual search check**

1. Play an ordinary disc.
2. Push the manual search button to check that manual search can be smoothly made at low and high speeds (both in forward and reverse modes).

- **Check for defects**

1. Play black spot portion of the test disc to check that there is no sound skip or noise.
2. Play the fingerprint portion of the test disc to check that there is no sound skip or noise.

OPTICAL PICKUP ADJUSTMENT

Equipment used

- Two-channel oscilloscope (with trigger) of 30 MHz or over.
- Test disc (SZZP1014F, SZZP1054C, SZZP1056C).
- Hexagonal wrench (SZZP1044C)

Adjustment Procedure

*If the optical pickup is replaced, adjust it following the procedure below.

Step 1: Assemble the set to make it ready for power-on check

▼

Step 2: Temporary setting of each VR. ..... Page 34

▼

Step 3: Turntable height adjustment. ..... Page 40

Step 4: Mechanical adjustment ..... Page 40

▼

Step 5: Electrical adjustment ..... Page 35

Adjustment Points

- **Traverse unit (rear side)**

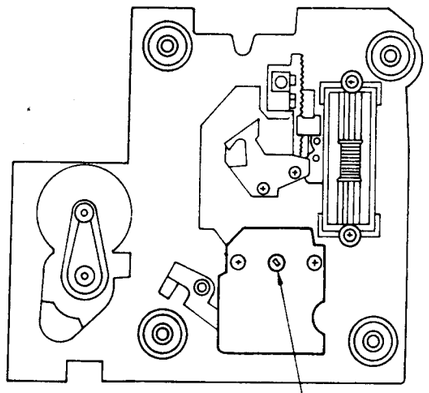

Turntable height adjustment screw

- **Optical pickup**

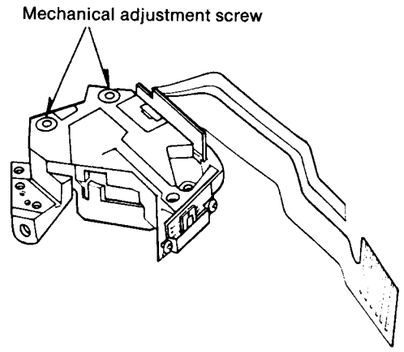

TURNTABLE HEIGHT ADJUSTMENT

1. Connect CH1 of the oscilloscope to **TJ102** (+) and chassis (–) of main P.C.B.

   Oscilloscope setting: VOLT .....100 mV
   SWEEP .....5 msec.
   INPUT .....DC
2. Set the DC ground level of the osciloscope.
3. Turn "**on**" the power switch and play the test disc (SZZP1014F or SZZP1054C).
4. Turn the adjusting screw so that the voltage at the waveform center of the oscilloscope is **0±50 mV**. (As shown in the figure at right, adjust the screw on the bottom panel using a screwdriver (–).)
5. After the adjustment, apply screw-lock paint (RZZOL01) to the adjusting screw.

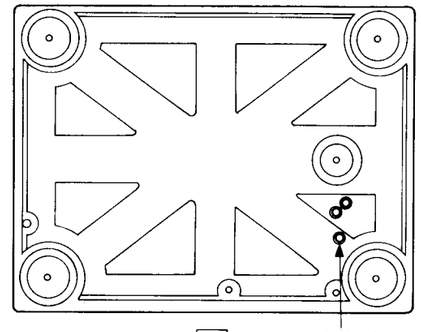

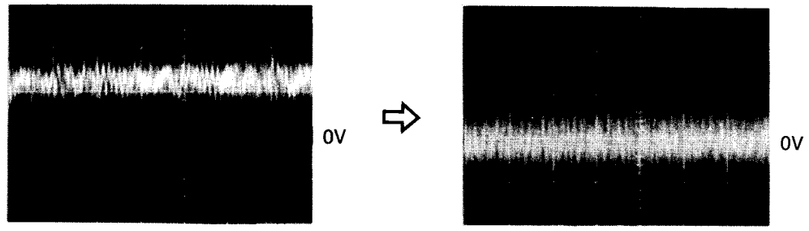

MECHANICAL ADJUSTMENT

1. Connect CH1 of the oscilloscope to **TJ302** (+) and **TJ303** (–) of the main P.C.B.

   Oscilloscope setting: VOLT .....500 mV
   SWEEP .....0.5 μsec.
   INPUT .....AC
2. Turn "**on**" the power switch and play **Track No. 9** of the test disc (SZZP1056C).
   If any track other than No. 9 is played back, this adjustment cannot be made.
3. Alternately turn the 2 optical pickup adjusting screws with the hexagonal wrench (SZZP1044C) so that the vertical fluctuation of RF signal is minimized and the eye pattern most open.
4. After the adjustment, apply screw-lock paint (RZZOL01) to the adjusting screw.

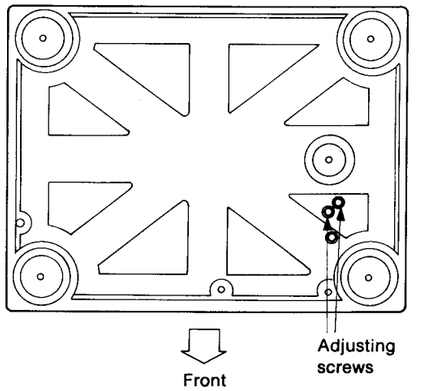

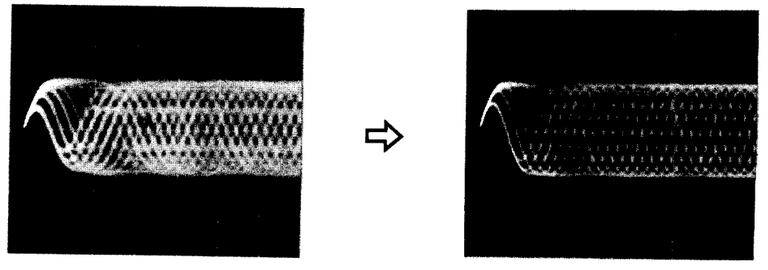

■ TERMINAL FUNCTION OF LSI

• MN6617S (Digital Signal Processing: EFM Decoder, Error Correction, CLV Servo)

Pin No.	Mark	I/O Devision	Function
1	BLKCK	O	Sub-code block (Q data) clock (75 Hz)
2	$\overline{\text{CLDCK}}$	O	Sub-code frame (Q data) clock (7.35 kHz)
3	$\overline{\text{SUBQ}}$	O	Sub-code (Q data) output
4	CRC	O	Sub-code (Q data) CRC check (Not used, open)
5	$\overline{\text{RST}}$	I	Reset signal input (reset at "L")
6	MLD	I	Command load input
7	MCLK	I	Command clock input
8	MDATA	I	Command data input
9	DMUTE	I	Muting control (Not used, connected to GND)
10	$\overline{\text{TRON}}$	I	Tracking servo ON signal (tracking servo ON at "L")
11	STAT	O	Processing condition (CRC, OTC, CLVOK, TT STOP) output
12	SMCK	O	Clock output (4.2336 MHz)
13	PMCK	O	Pitch control clock output
14	ITC	I	Track counter input signal
15	$\overline{\text{TEST}}$	I	Test mode selection (Not used, connected to +5V)
16	X2	O	Clock output
17	X1	I	Clock input
18	SEL	I	DA output parallel/serial selection (serial at "L")
19	LDG/WDC	O	L channel deglitch signal/serial data word clock.
20	RDG	O	Clock signal output for spindle motor control
21	DEMPH	O	De-emphasis ON signal (de-emphasis ON at "H")
22	IPFLAG	O	Interpolation flag (interpolation at "H")
23	FLAG0	O	Error flag (error at "H")
24	FLAG6	O	16 K RAM address reset signal (reset at "H")
25	XCK	O	Clock (16.9344 MHz) output
26	SRDATA	O	Serial data output (MSB first)
27	SRDATA	O	Serial data output (LSB first)
28	SRCK	O	Serial data beat clock.
29	WDCK	O	Serial data word clock (Not used)
30	BYTCK	O	Serial data byte clock (Not used)
31	GND	I	GND terminal
32	R/L	O	R/L signal
33	RESY	O	Resynchronizing signal

Pin No.	Mark	I/O Devision	Function
34	FCLV	O	Synchronizing detection signal (Not used)
35	IPSEL	O	Interpolation flag for each byte (Not used)
36	IPBYTE	I/O	Interpolation prohibited (Not used, connected to GND)
37	FLAG5	O	C2 decoder correction flag 3 (Not used)
38	FLAG4	O	C2 decoder correction flag 2 (Not used)
39	FLAG3	O	C2 decoder correction flag 1 (Not used)
40	FLAG2	O	C1 decoder correction flag 2 (Not used)
41	FLAG1	O	C1 decoder correction flag 1 (Not used)
42	FLCK0	O	Crystal frame clock
43 ⟆ 50	D7 ⟆ D0	I/O	16 K RAM data output
51	RAMOE	O	16 K RAM $\overline{\text{OE}}$ signal
52	RAMWE	O	16 K RAM $\overline{\text{WE}}$ signal
53 ⟆ 63	RAMA 0 ⟆ RAMA10	O	16 K RAM address signal (RAMA0 : LSB, RAMA10: MSB)
64	PC	O	Spindle motor ON signal (ON at "L")
65	EC	O	Spindle motor drive signal
66	FG	I	Spindle motor FG signal input (Not used, open)
67	VCNT	——	(Not used, connected to GND)
68	REXT	——	(Not used, connected to GND)
69	VDD	I	Power supply (+5V)
70	PD	——	(Not used, open)
71	PCKO	——	(Not used, open)
72	PCK	I	PLL extract clock input
73	VDD	I	Power supply (connected to +5V)
74	EFM	I	EFM signal input (PLL)
75	SRF	I	EFM signal input (DSL)
76	DO	I	Drop-out signal (Drop-out at "H")
77	CLVS	O	11T servo OK signal (OK at "H")
78	FPC	O	PLL frequency comparision signal
79	BSSEL	O	PLL frequency in take operation signal.
80	SRFO	——	(Not used, open)
81	NSRF	——	(Not used, open)
82	RF	——	(Not used, open)
83	SUBC	O	Sub-code serial output data
84	SBCK	I	Clock for sub-code serial output

• MN6618A (Digital Filter)

Pin No.	Mark	I/O Device	Function
1	NC	——	Not connected
2	D012	O	16-bit data output (Not used, open)
3	D011	O	16-bit data output (Not used, open)
4	D010	O	16-bit data output (Not used, open)
5	GND	I	GND terminal
6	D09	O	16-bit data output (Not used, open)
7	NC	——	Not connected
8	D08	O	16-bit data output (Not used, open)
9	D07	O	16-bit data output (Not used, open)
10	NC	——	Not connected
11	NC	——	Not connected
12	D06	O	16-bit data output (Not used, open)
13	D05	O	16-bit data output (Not used, open)
14	D04	O	16-bit data output (Not used, open)
15	LRCK	O	Clock output
16	NC	——	Not connected
17	NC	——	Not connected
18	D02/ WDCK	O	16-bit data output/clock output (Not used, open)
19	D01/ SRCK	O	16-bit data output/serial data output beat clock
20	D00/SRDATA	O	16-bit data output/serial data output
21	MDATA	I	Command data input

Pin No.	Mark	I/O Device	Function
22	NC	——	Not connected
23	MCLK	I	Command clock input
24	MLD	I	Command load input
25	NC	——	Not connected
26	$\overline{\text{RST}}$	I	Reset signal input (reset at "L")
27	NC	——	Not connected
28	LRCK	I	L/R channel changeover signal
29	NC	——	Not connected
30	SFT	I	Serial data input clock
31	SIN	I	Serial data input
32	NC	——	Not connected
33	X OUT	O	Clock output (Not used)
34	X IN	I	Clock input (16.9344 MHz)
35	OSEL	I	DA output parallel/serial changeover(Serial at "H")
36	LDGL	O	L channel deglitch signal
37	RDGL	O	R channel deglitch signal
38	VDD	I	Power supply (connected to +5V)
39	D015	O	16-bit data output (MSB) (Not used, open)
40	D014	O	16-bit data output (Not used, open)
41	NC	——	Not connected
42	D013	O	16-bit data output (Not used, open)

• AN8290S (Spindle Motor Drive)

Pin No.	Mark	I/O Devision	Function
1	GND	I	Minimum potential of IC control. (In this unit, it is connected to VEE [−8.0V])
2	DCR	I	Standard voltage of FAI, PC, CLK. (In this unit, it is connected to 2.5V.)
3	FAI	I	Torque command filter amp. input. (Normal rotation command when FAI < DCR.)
4	FAO	O	Filter amp. output.
5	DI	I	Absolute value circuit input.
6	LPF	I	Capacitor terminal for low pass filter of current feedback loop.
7	A1	O	Drive signal output.
8	A2	O	
9	A3	O	
10	PGND	I	Minimum potential of IC power. (In this unit, it is connected to VEE [−8.0V])
11	CS	I	Drive current detection resistor terminal.
12	PVCC	I	Power input for IC power.

Pin No.	Mark	I/O Devision	Function
13	NC	I	Not used in this unit.
14	NC	I	
15	H2−	I	Negative output of Hall element is input.
16	H2+	I	Positive output of Hall element is input.
17	H1−	I	Negative output of Hall element is input.
18	H1+	I	Positive output of Hall element is input.
19	HSW	I	Bias switch of Hall element. (OFF when PC > DCR)
20	HB	I	Bias power of Hall element.
21	VCC	I	Power input for IC control.
22	PC	I	Power control. (Power down mode when PC > DCR)
23	CLK	I	Clock input. (DCR standard, operated at the edge of rise.)
24	TC	I	Triangular wave generation capacitor terminal.

MC-Service

• AN8370S (Optical Servo Control)

Pin No.	Mark	I/O Devision	Function
1	VEE	I	Power supply (connected to −5V)
2	LSA	I	Phase difference input (A)
3	GND	I	GND terminal
4	LSB	I	Phase difference input (B)
5	APC	O	Auto laser power control output
6	TEOUT	O	Tracking error signal output
7	TEG	I	Tracking error gain adjusting input
8	TE	I	Phase difference-voltage conversion
9	TE	I	Phase difference-voltage conversion
10	APC −	O	Laser power inversion input
11	C·MEM	I	Capacitor connection for phase difference memory
12	APC +	I	Laser power non-inversion input
13	VREF	O	Reference current generation
14	SENSE	O	Selector output (track-crossed)
15	HIN	I	Tracking hold circuit input
16	HOUT	O	Tracking hold circuit output
17	SPCNT	O	Track-cross speed control output
18	C·MSP	I	Track-cross reference speed setting capacitor connection
19	C·AF	I	Auto focus timer capacitor connection
20	KICK R/$\overline{F}$	O	Track kick signal output
21	VCC	I	Power supply (connected to +5V)
22	CNT1	I	Control input ($\overline{FOON}$: Focus servo ON signal)
23	CNT2	I	Control input ($\overline{TRON}$: Tracking servo ON signal)
24	CNT3	I	Control input (KICKF : Kick direction [forward] command)
25	CNT4	I	Control input (KICKR : Kick direction [reverse] command)
26	$\overline{F\cdot LOCK}$	O	Focus lock signal output
27	C·FBDO	O	Capacitor connection for inversion RF high speed detection
28	C·SBDO	O	Capacitor connection for inversion RF low speed detection
29	C·SBRT	O	Capacitor connection for non-inversion RF low speed detection
30	C·FBRT	O	Capacitor connection for non-inversion RF high speed detection
31	RF OUT	O	RF signal output
32	BDO	O	Drop-out detection output
33	RFIN	I	RF signal input
34	S·OUT	O	Focus search signal output
35	C·LW	I	Capacitor connection for triangular wave generation
36	FE·OUT	O	Focus error signal output
37	FEG	I	Focus error gain adjusting input
38	FE·REF	I	Focus error comparison voltage generation
39	PDB	I	Photo detector current input (B)
40	IVB	O	Current/voltage conversion output (B)
41	IVA	O	Current/voltage conversion output (A)
42	PDA	I	Photo detector current input (A)

• EHDGA1243 (Data Slice and PLL)

Pin No.	Mark	I/O Devision	Function
1	PCK	O	Clock output extracted from SRF
2	EFM	O	EFM signal output synchronized with PCK
3	D·GND	I	GND terminal (digital system)
4	SRF	O	RF signal output data-sliced into digital value
5	SLC	I	Slice level control signal input
6	DO	O	Drop-out detection pulse output
7	FPC	I	Frequency comparison error signal input.
8	VCC	I	Power supply (connected to +5V)
9	VA	I	VCO free ran frequency adjusting current input.
10	VR	I	Resistor connection for VCO oscillation frequency
11	VEE	I	Power supply (connected to −5V)
12	VC1	I	Capacitor connection for VCO oscillator frequency
13	VC2	I	Capacitor connection for VCO oscillator frequency
14	A·GND	I	GND terminal (analog system)
15	RF	I	RF signal input

• MN15261PDK (System Control and FL Drive)

Pin No.	Mark	Signal	I/O Devision	Function
1	VSS	GND	I	GND terminal
2	XO	——	O	Not used (Open)
3	X1	SENSE	I	Optical servo condition input
4	P00	AS.LED	O	Auto space LED drive
5	P01	M DATA	O	Command data output
6	P02	MCLK	O	Command clock output
7	P03	MLD	O	Command load output
8	P10	ϕ0	I	Search dial control
9	P11	ϕ1	I	Search dial control
10	P12	FADER.S	I	Fader start signal input
11	P13	CUEDET	I	Auto cue ON signal input
12	$\overline{SYNC}$	——	O	Not used (Open)
13	$\overline{RST}$	RESET	I	Reset signal input (reset at "L")
14	$\overline{IRQ}$	BLKCK	I	Sub-code block (Q data) clock (75Hz) input
15 ~ 18	P50 ~ P53	KEY	I	Key scan input
19	$\overline{SBT}$	$\overline{CLDCK}$	I	Sub-code frame clock (7.35kHz)
20	$\overline{SBD}$	SUBQ	I	Sub-code Q data input
21	P20	$\overline{SEEK}$	O	Traverse servo control
22	P21	PLC	O	Plunger drive
23	P22	$\overline{REV}$	O	Traverse reverse command signal
24	P23	$\overline{FWD}$	O	Traverse forward command signal
25	P30	CNT4	O	Optical servo IC control signal (KICKR: Kick direction [Reverse] command)
26	P31	CNT3	O	Optical servo IC control signal (KICKF: Kick direction [Forward] command)
27	P32	CNT2	O	Optical servo IC control signal (TRON: Tracking servo)
28	P33	CNT1	O	Optical servo IC control signal (FOON: Focus servo)
29	P40	START	I	Key input strobe and processing status input from signal processing LSI traverse position detection.
30	P41	COMP	O	TOC read control (ON at "L")
31	P42	$\overline{FLOCK}$	I	Optical servo condition (focus) input
32	P43	SENSE	I	Optical servo condition (track cross) input
33	PE0	$\overline{M.RLY}$	O	Muting control
34	PE1	$\overline{FRST}$	O	Auto cue control
35	P60	PLAY	O	Play LED drive
36	P61	PAUSE	O	Pause LED drive
37	DAC	DAC	O	Traverse servo control
38	VPP	——	I	FL drive power supply (connected to −33V)
39 ~ 52	D0 ~ DD	——	O	FL grid signal and key scan signal
53 ~ 61	S8 ~ S0	——	O	FL anode signal
62	OSC2	——	I	Clock terminal
63	OSC1	——	I	Clock input
64	VDD	——	I	Power supply (connected to +5V)

• MN1550PDM (Remote Control Signal Processing)

Pin No.	Mark	Signal	I/O Devision	Function
1	VDD	——	I	Power supply (connected to +5V)
2	OSC1	SMCK	I	Clock input
3	OSC2	——	——	Not used, open
4	P22	——	——	Not used, open
5	RST	RESET	I	Reset signal input
6	P21	——	——	Not used, open
7	P20	——	I	Remote control signal input
8	IRQ	——	I	Program enable/de-enable control
9	P31	——	O	Remote control LED drive
10 ~ 13	P13 ~ P0	Data	I	Key strobe
14 ~ 17	P03 ~ P00	Data	I	Key strobe
18	VSS	GND	I	GND terminal

• MN51005PDN (Digital Signal Processing, Serial/Parallel Converter)

Pin No.	Mark	Signal	I/O Devision	Function
1 ~ 6	B1L ~ B6L	DATA	O	L-channel parallel data output
7	NC	——	——	Not connected
8	VDD	——	I	Power supply (+5V)
9	VSS	GND	I	GND terminal
10	NC	——	——	Not connected
11				
12 ~ 16	B7L ~ B11L	DATA	O	L-channel parallel data output
17	NC	——	——	Not connected
18				
19 ~ 22	B12L ~ B15L	DATA	O	L-channel parallel data output
23	NC	——	——	Not connected
24	VSS	GND	I	GND terminal
25	VDD	——	I	Power supply (+5V)
26	B16L	DATA	O	L-channel parallel data output
27 ~ 37	B1R ~ B11R	DATA	O	R-channel parallel data output
38	NC	——	——	Not connected
39	VDD	——	I	Power supply (+5V)
40	VSS	GND	I	GND terminal

Pin No.	Mark	Signal	I/O Devision	Function
41	NC	——	——	Not connected
42				
43	B12R	DATA	O	R-channel parallel data output
44 ~ 46	NC	——	——	Not connected
47	B13R	DATA	O	R-channel parallel data output
48	B14R			
49	NC	——	——	Not connected
50	B15R	DATA	O	R-channel parallel data output
51	B16R			
52	DEG	——	O	Deglitch signal output
53	AQOUT	——	O	Auto cue control
54	AQRST		I	
55	NC	——	——	Not connected
56	VDD	——	I	Power supply (+5V)
57	VSS	GND	I	GND terminal
58	PHASE	——	I	Phase change control
59	NC	——	——	Not connected
60				
61	SRDATA	DATA	I	Serial data input
62	SRCLK	CLOCK	I	Serial data input clock
63	LRCK	CLOCK	I	16-bit latch clock
64	RDG	CLOCK	I	8-bit shift register clock

■ TERMINAL GUIDE OF IC'S, TRANSISTORS AND DIODES

AN6914	8 pin
SVIM5238P	
NJM5532DD	
SVIUPD4053BC	16 pin
SVIPCM54KP-M	28 pin
MN15261PDK	64 pin

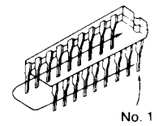

MN6618A	42 pin
MN51005PDN	64 pin
MN6617S	84 pin

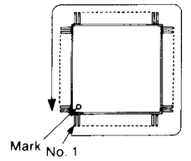

AN6552S	8 pin
AN6914S	
AN6554NS	14 pin
MN74HCU04S	
MN74HC74S	
MN74HC00S	
MN1550PDM	18 pin
MN4416S-12	24 pin
AN8290S	
AN8370S	42 pin

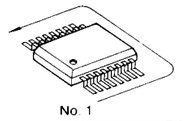

EHDGA1243

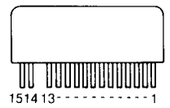

SVIAL079...10 pin

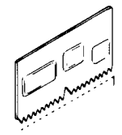

SVINJM4556SA

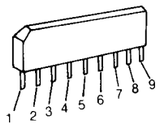

AN78M05
AN78M15
AN78M12

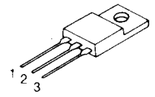

AN79N05
AN79N12
AN79N15

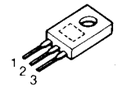

AN79L12

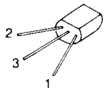

AN78N12
AN78N15

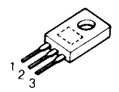

MN1280-R

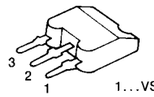

2SD1055
2SB822
2SD638
2SC2021
2SD973
2SB793

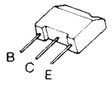

UN4114
2SC3311Q
2SA1309Q
UN4212
UN4214
UN4112
UN1231

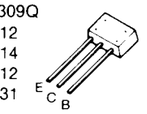

2SD892

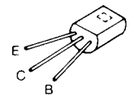

2SK301

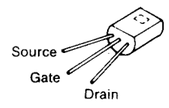

SVD1SR35200A

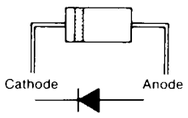

SVDS1WB40
SVDS1WBAK20

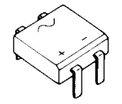

MA165

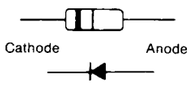

MA4082M
MA4330L
MA4054-MTA

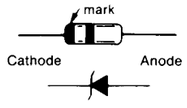

LN66-S

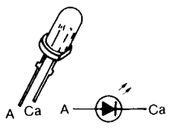

SVGLB74VR3HL
SVGLB74MG3HL
SVGLB74DU3HL

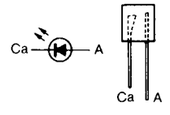

MA154WA

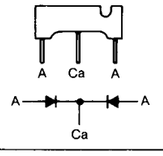

MA154WK

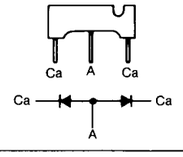

SVDKV1230Z23

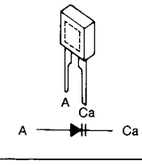

MC-Service

■ PRINTED CIRCUIT BOARD AND WIRING CONNECTION DIAGRAM

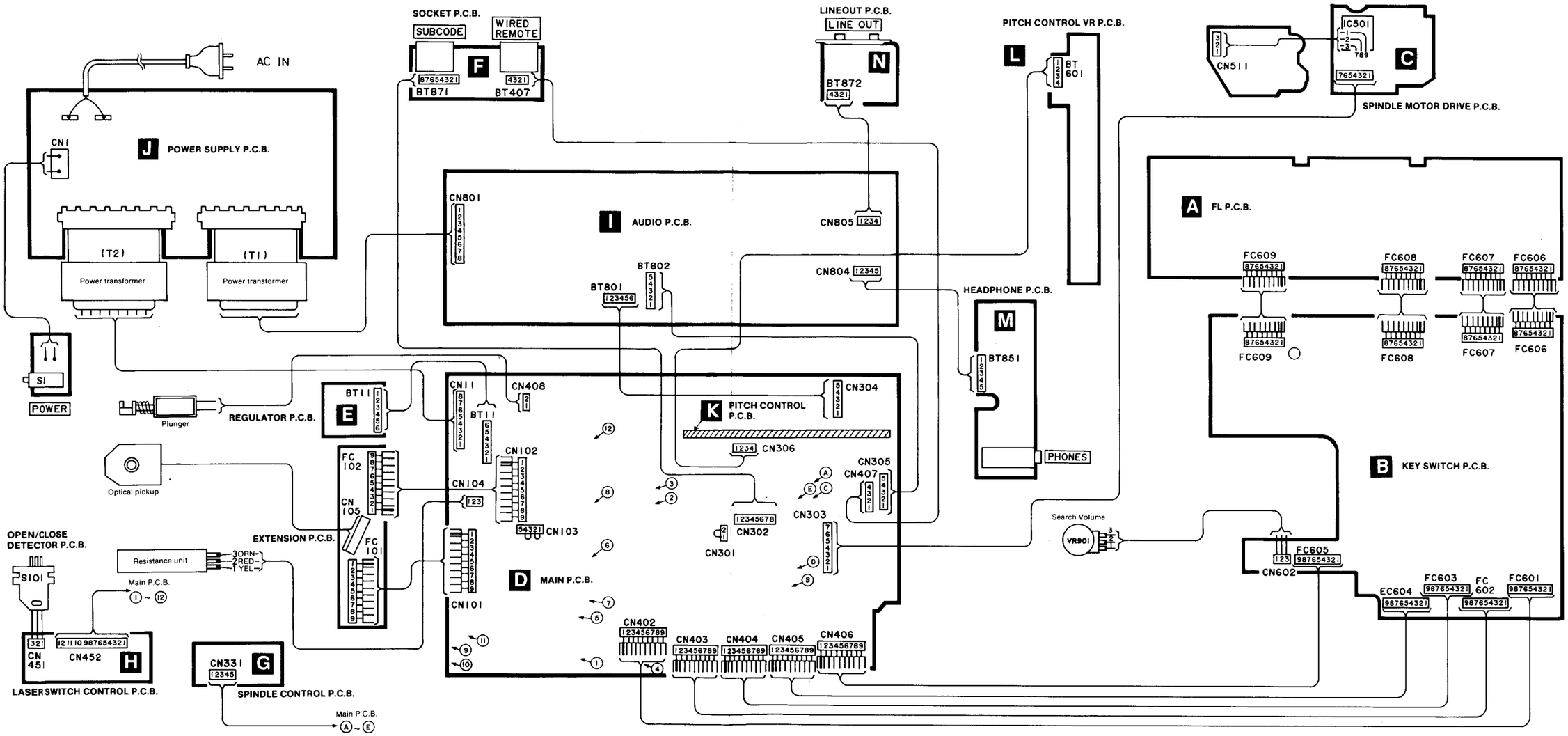

D MAIN P.C.B.

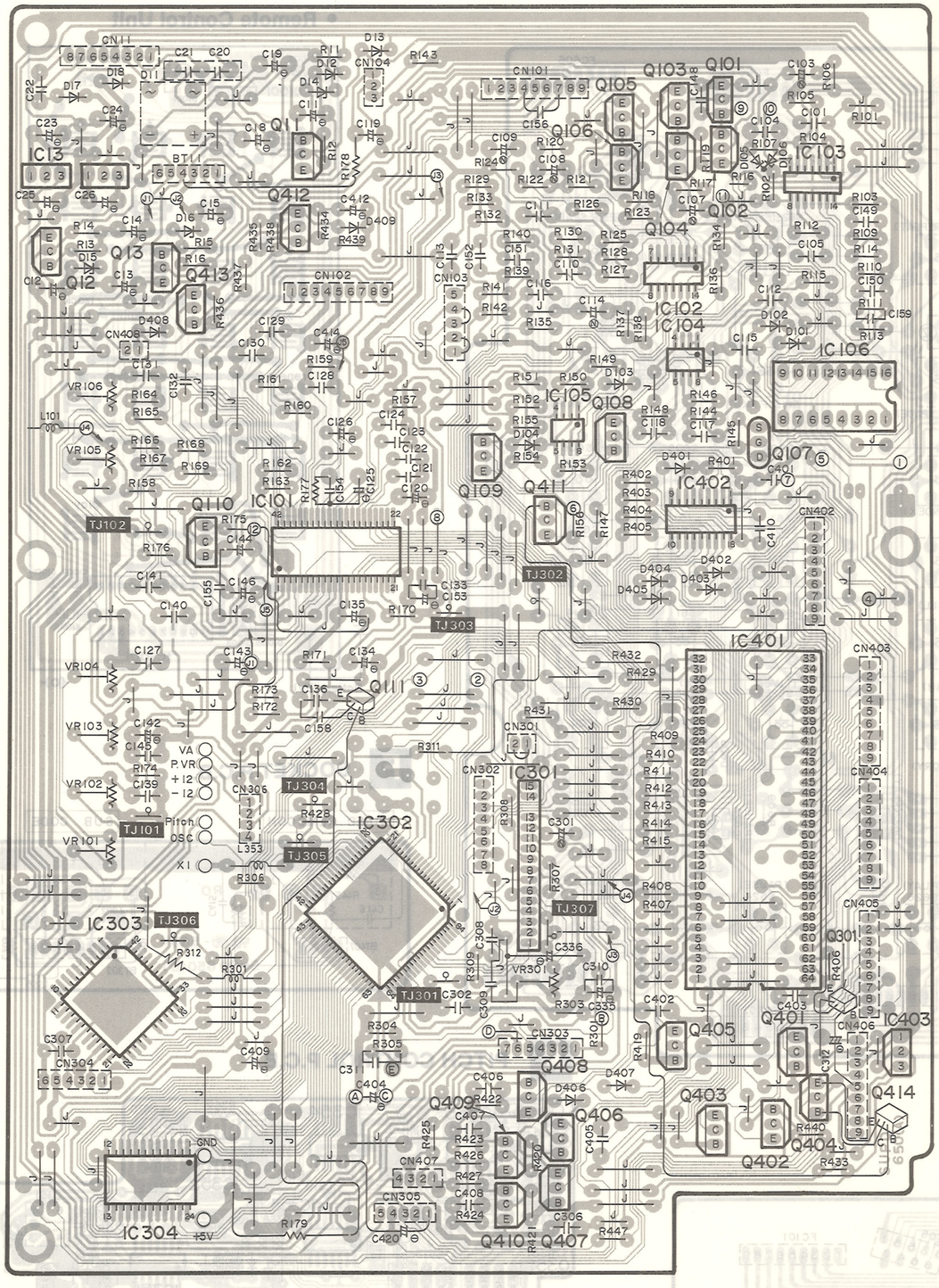

I AUDIO P.C.B.

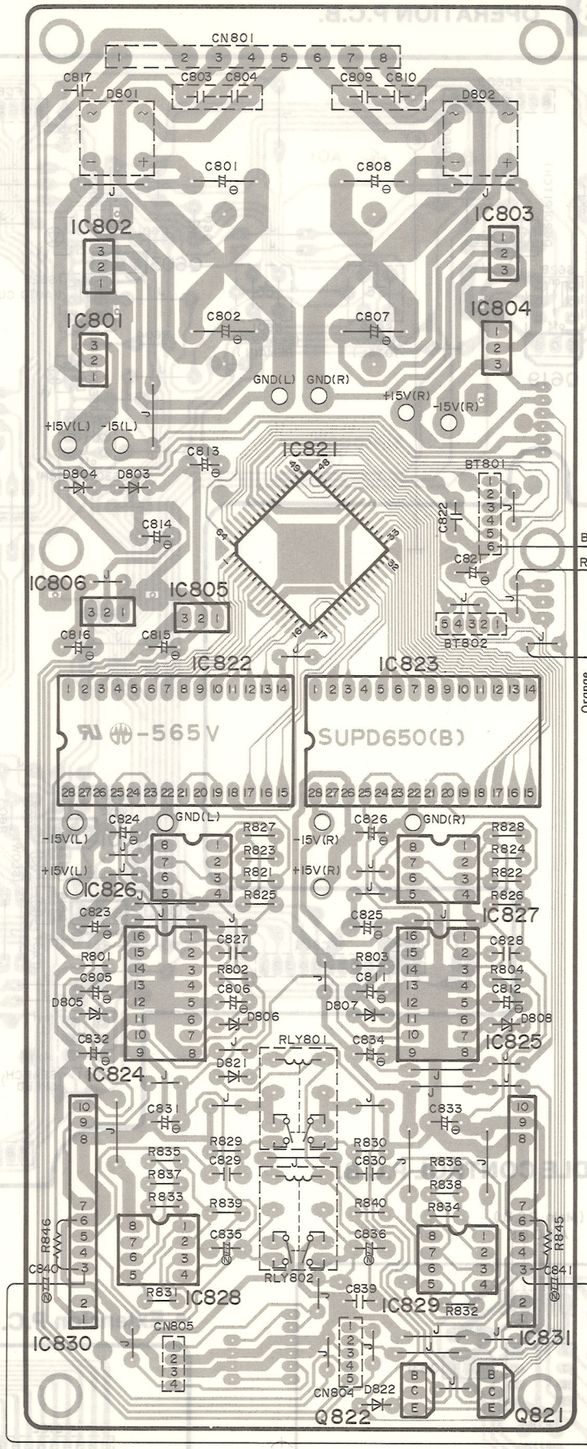

E REGULATOR P.C.B.

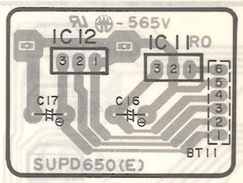

N LINE OUT P.C.B.

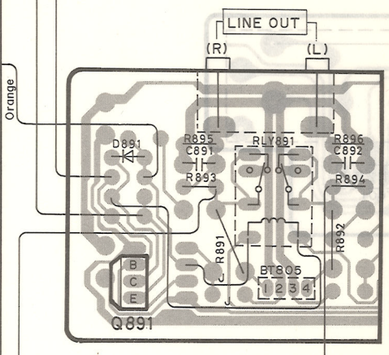

J PO

I AUDIO P.C.B.

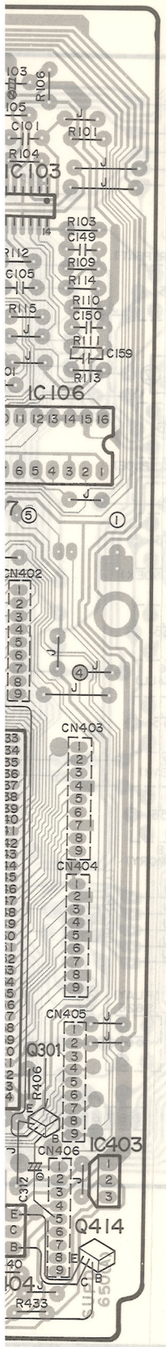

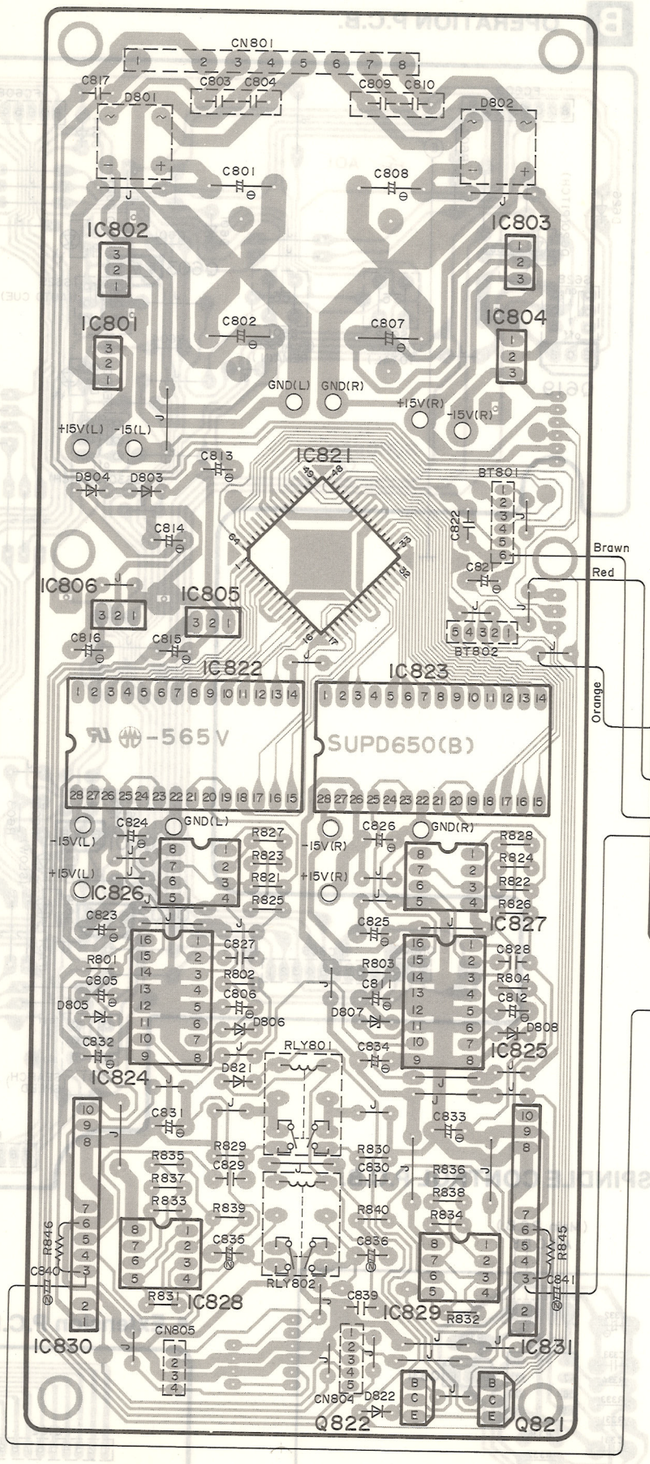

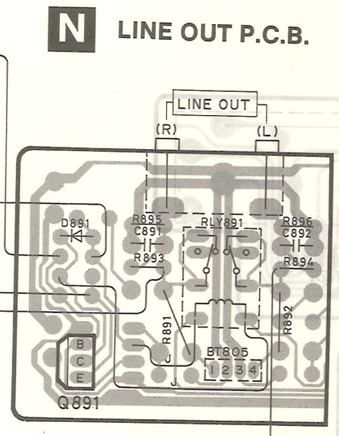

E REGULATOR P.C.B.

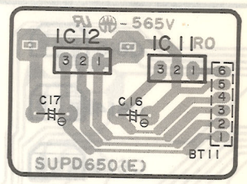

N LINE OUT P.C.B.

J POWER SOURCE P.C.B. (For U.S.A. and Canada)

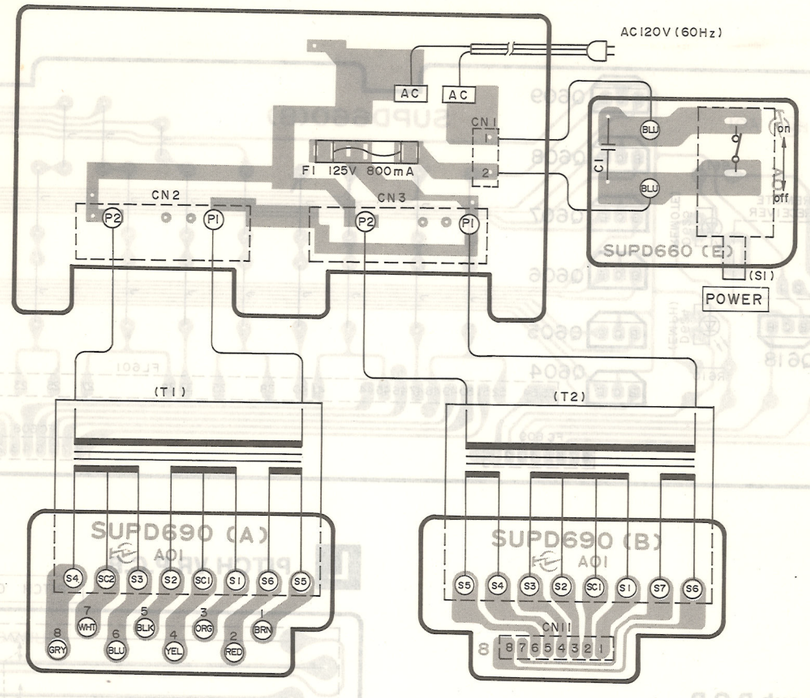

POWER SOURCE P.C.B. (For others)

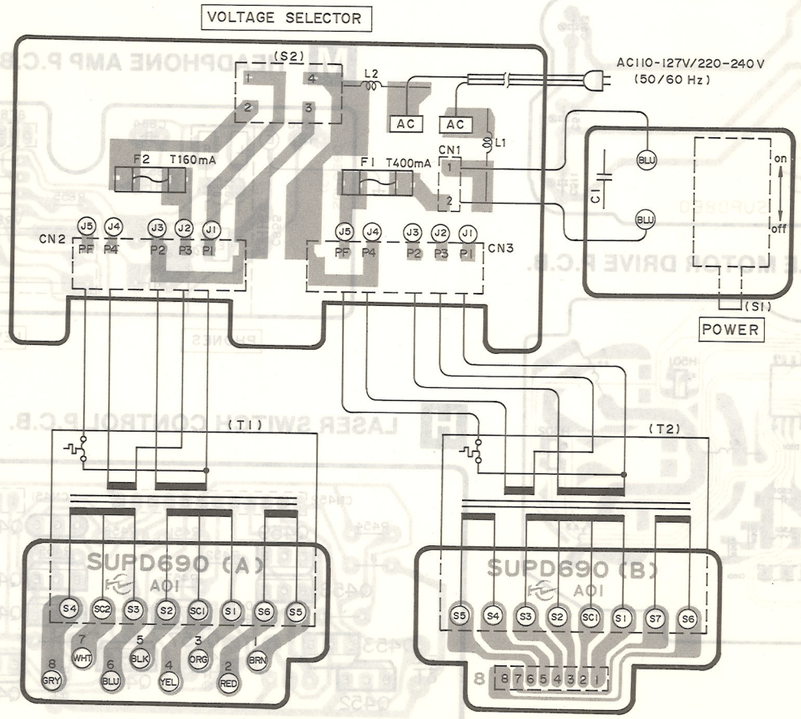

■ PRINTED CIRCUIT BOARDS

A FL P.C.B.

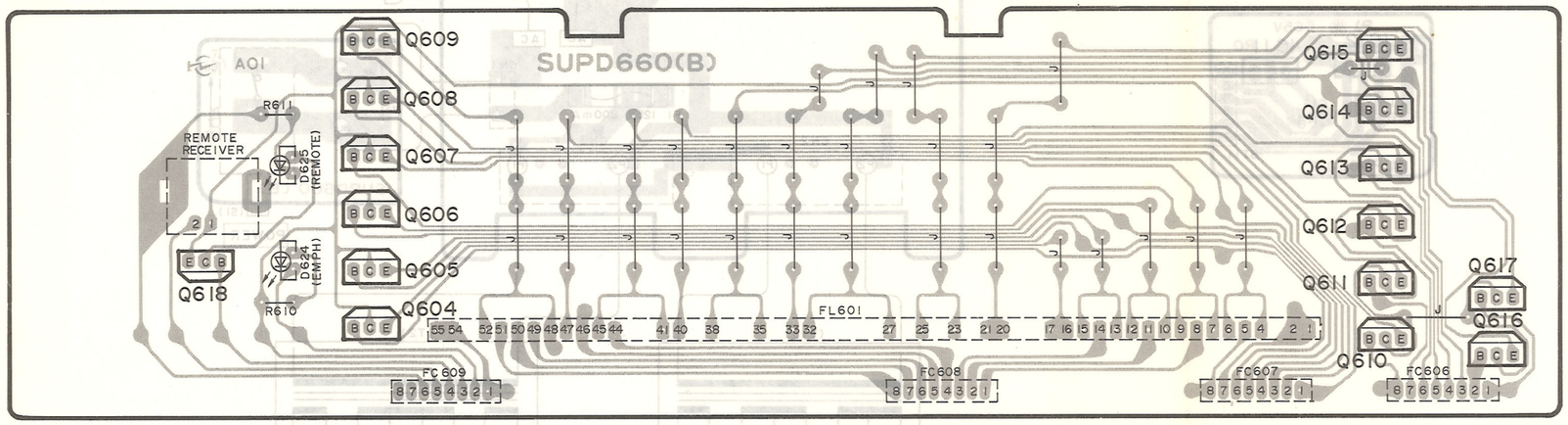

B OPERATION P.C.B.

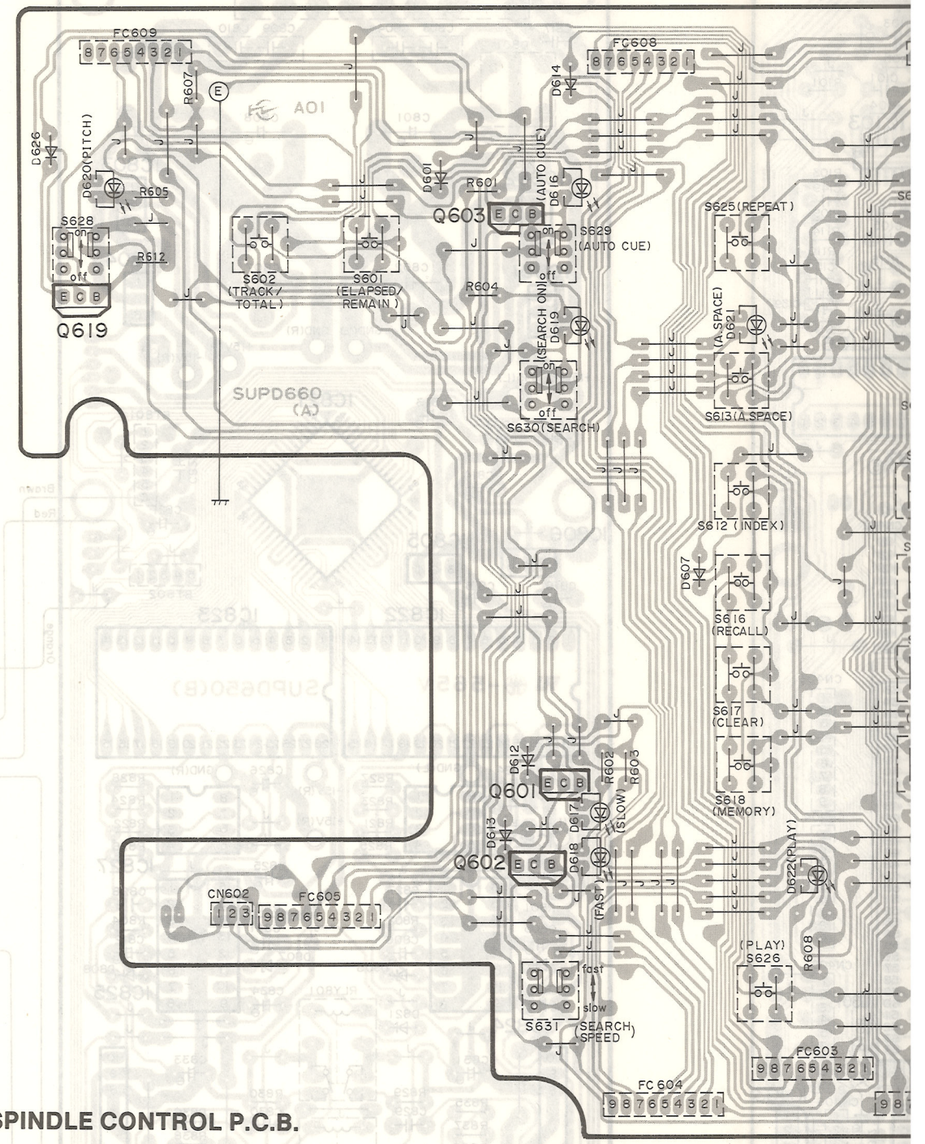

L PITCH VR P.C.B.

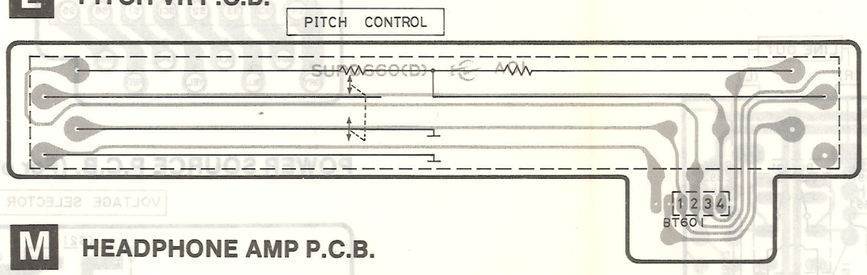

• Spindle sub P.C.B.

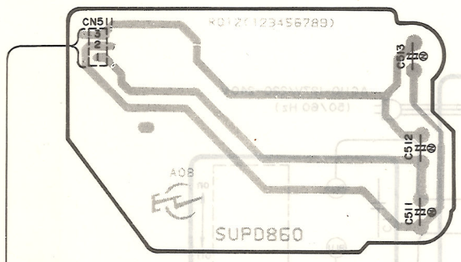

M HEADPHONE AMP P.C.B.

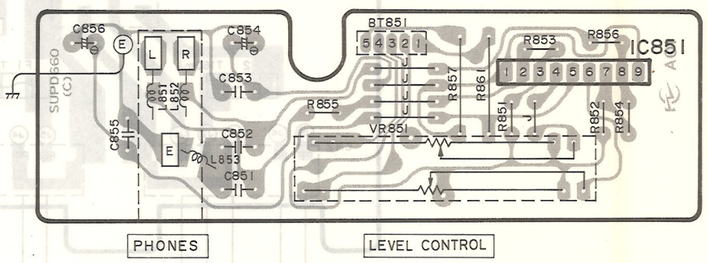

C SPINDLE MOTOR DRIVE P.C.B.

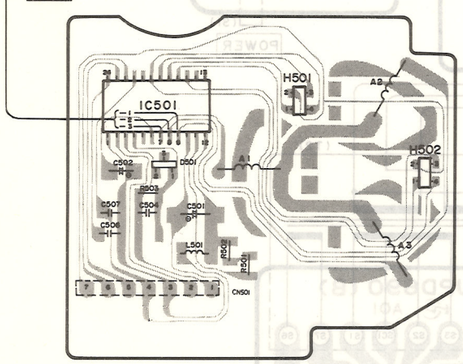

H LASER SWITCH CONTROL P.C.B.

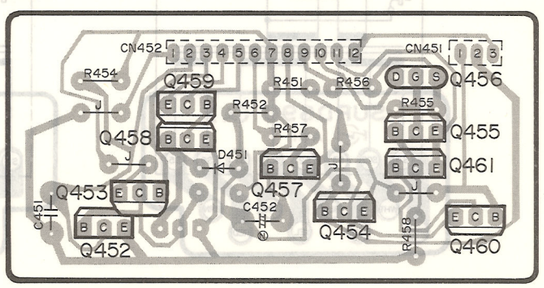

• Laser switch P.C.B.

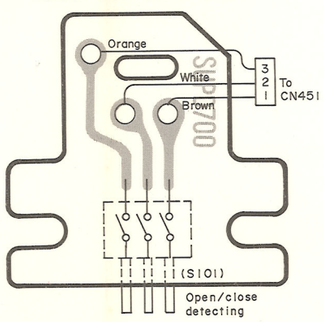

G SPINDLE CONTROL P.C.B.

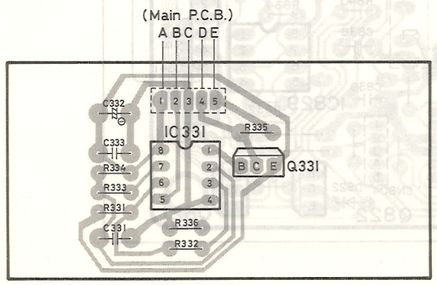

• Extension P.C.B.

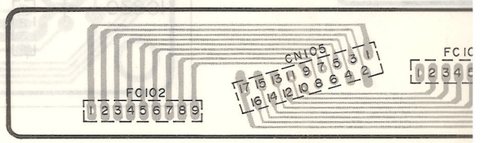

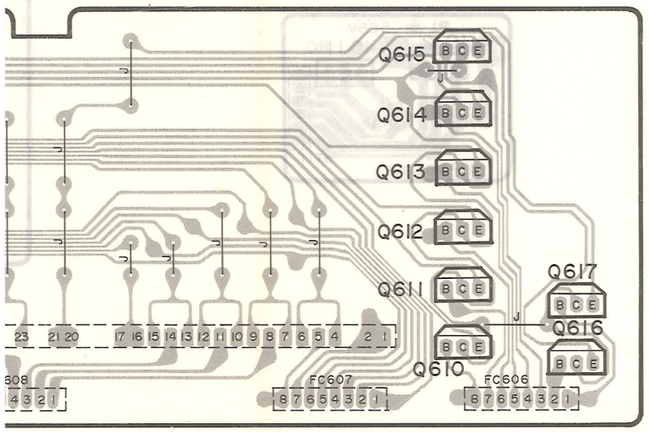

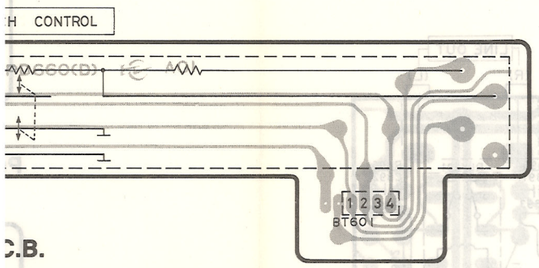

C.B.

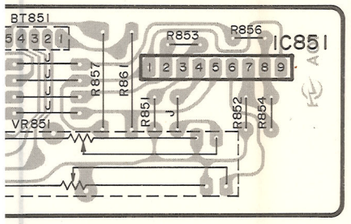

LEVEL CONTROL

B.

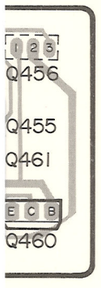

• Laser switch P.C.B.

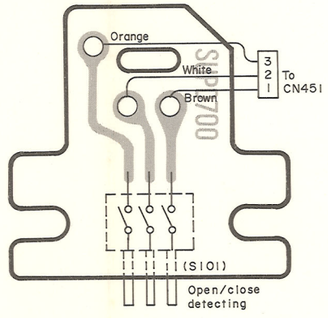

B OPERATION P.C.B.

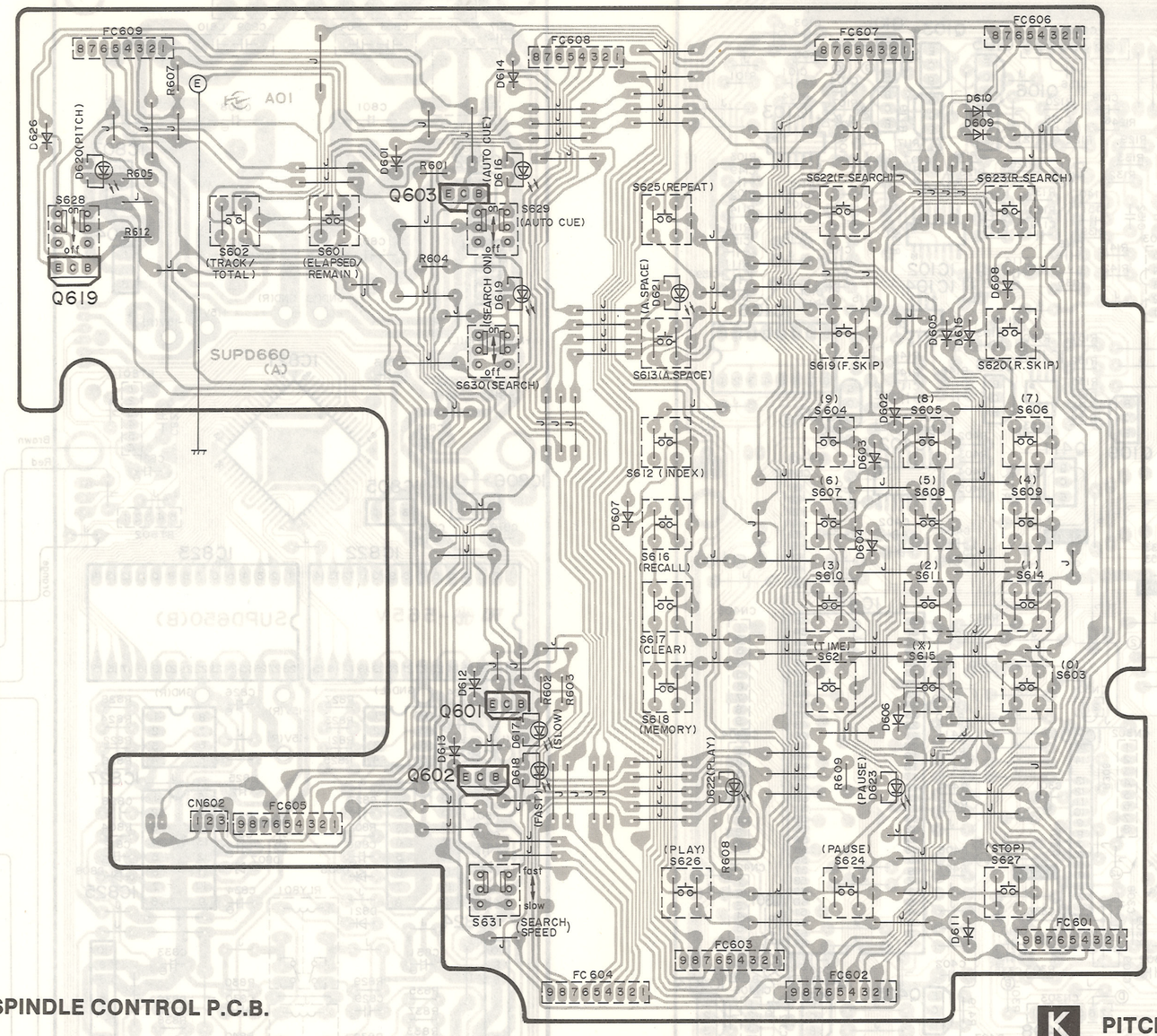

• Remote Control Unit

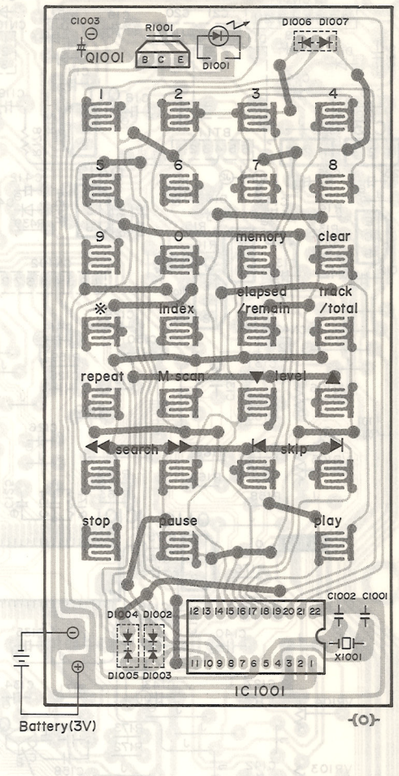

F SOCKET P.C.B.

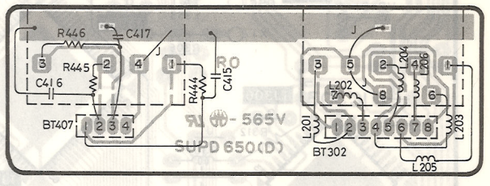

G SPINDLE CONTROL P.C.B.

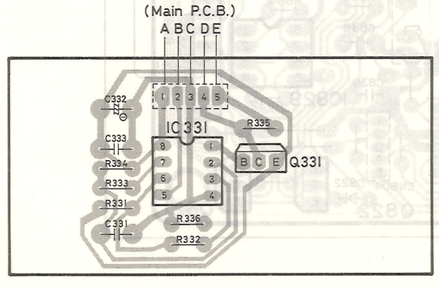

• Extension P.C.B.

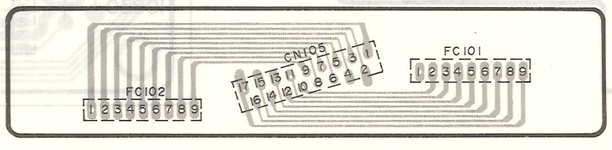

K PITCH CONTROL P.C.B.

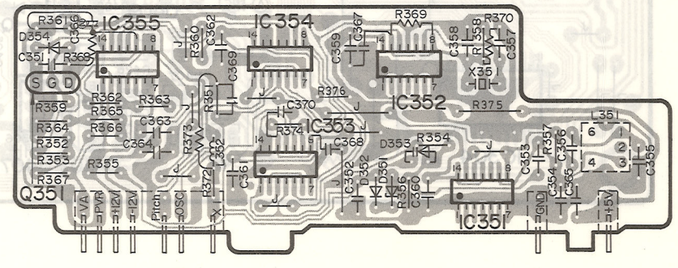

■ SCHEMATIC DIAGRAM

(This schematic diagram may be modified at any time with the development of new technology.)

1. **S1** : Power switch in "**on**" position.
2. **S2** : Voltage selector switch. (Except U.S.A. and Canada)
3. **S101** : Laser switch (Disc compartment open/close detection)
4. **S601** : Time mode (elasped/remain) select switch
5. **S602** : Time mode (track/total) select switch
6. **S603~611, 614** : Numeric switch (0~9)
7. **S612** : Index switch
8. **S613** : Auto space switch
9. **S615** : Asterisk switch
10. **S616** : Recall switch
11. **S617** : Clear switch
12. **S618** : Memory switch
13. **S619, 620** : Backward and forward track skip switch
14. **S621** : Time recall switch
15. **S622, 623** : Backward and forward rocking/search switch
16. **S624** : Pause switch
17. **S625** : Repeat switch
18. **S626** : Play switch
19. **S627** : Stop switch
20. **S628** : Pitch control switch.
21. **S629** : Auto cue switch
22. **S630** : Dial search switch
23. **S631** : Dial search speed selector switch
24. The voltage value and waveform are the reference voltage of this unit measured by DC electronic voltmeter (high impedance) and oscilloscope on the basis of chassis. Accordingly, there may arise some error in voltage values and waveforms depending upon the internal impedance of the tester or the measuring unit.
    * The parenthesized are the values of voltage generated during playing (Test disc 1kHz, L+R, 0dB), others are voltage values in stop mode.
25. Important safety notice:
    Components identified by ⚠ mark have special characteristics important for safety. When replacing any of these components, use only manufacturer's specified parts.
26. ——— : Positive voltage lines and negative voltage lines.
    ⟿⟿⟿ : Audio signal lines.

Caution!

IC and LSI are sensitive to static electricity.
Secondary trouble can be prevented by taking care during repair.

- Cover the parts boxes made of plastics with aluminum foil.
- Ground the soldering iron.
- Put a conductive mat on the work table.
- Do not touch the legs of IC or LSI with the fingers directly.

■ Internal connection of FL601

• Grid connection diagram

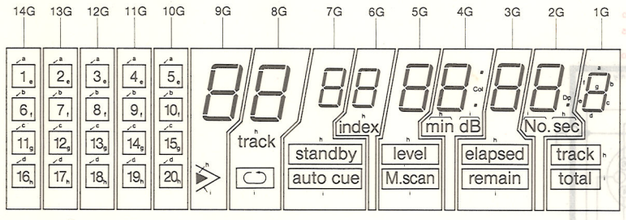

• Anode connection table

	14G	13G	12G	11G	10G	9G	8G	7G	6G	5G	4G	3G	2G	1G
a	1	2	3	4	5	a	a	a	a	a	a	a	a	a
b	6	7	8	9	10	b	b	b	b	b	b	b	b	b
c	11	12	13	14	15	c	c	c	c	c	c	c	c	c
d	16	17	18	19	20	d	d	d	d	d	d	d	d	d
e	1	2	3	4	5	e	e	e	e	e	e	e	e	e
f	6	7	8	9	10	f	f	f	f	f	f	f	f	f
g	11	12	13	14	15	g	g	g	g	g	g	g	g	g
h	16	17	18	19	20	▶	track	standby	index	level	min, col	elapsed	sec, DP	track
i	-	-	-	-	-	>	⟲	auto cue	-	M.scan	dB	remain	No.	total

• Remote control unit

Key No.	Function
0	Stop
2	Skip ⏮
3	Skip ⏭
4	Search ◀◀
5	Search ▶▶
6	Pause
7	Repeat
10	Play
11	Clear
15	Music Scan
16	Numeric 1
17	Numeric 2
18	Numeric 3
19	Numeric 4
20	Numeric 5
21	Numeric 6
22	Numeric 7
23	Numeric 8
24	Numeric 9
25	Numeric 0
33	Asterisk ※
36	Level Up ▲
37	Level Down ▼
40	Index
42	Memory
43	Elapsed/remain
44	Track/total

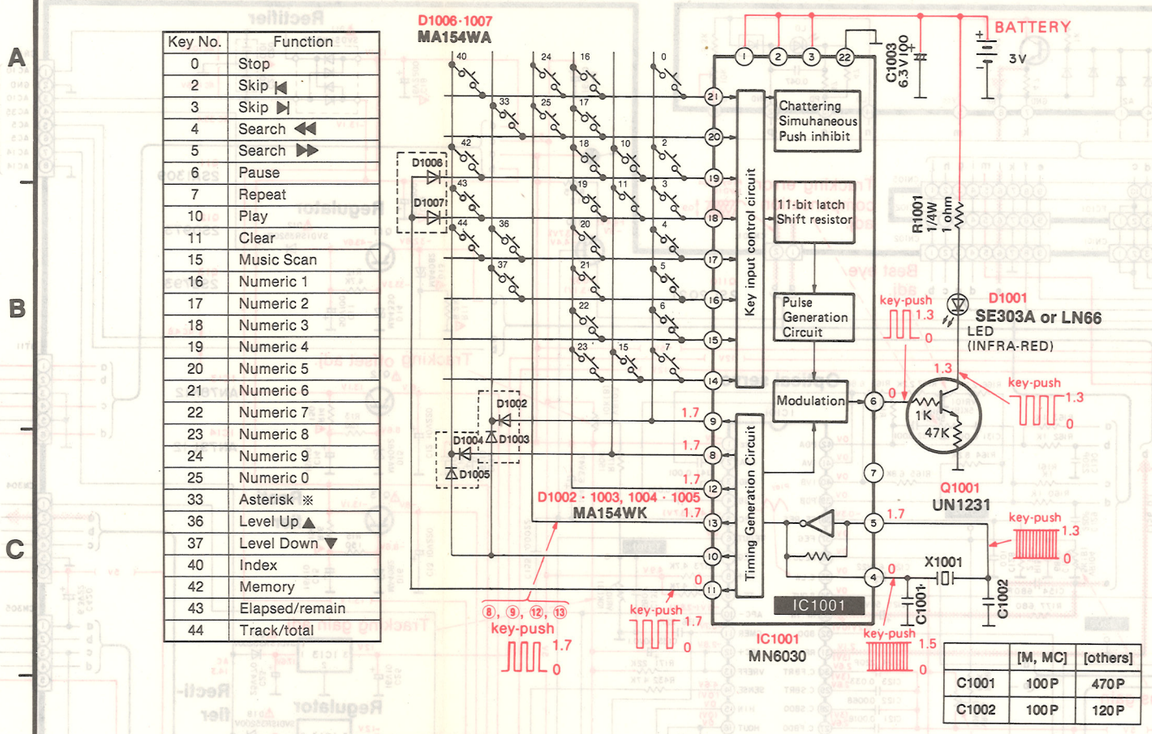

	[M, MC]	[others]
C1001	100P	470P
C1002	100P	120P

• Key number description and data code

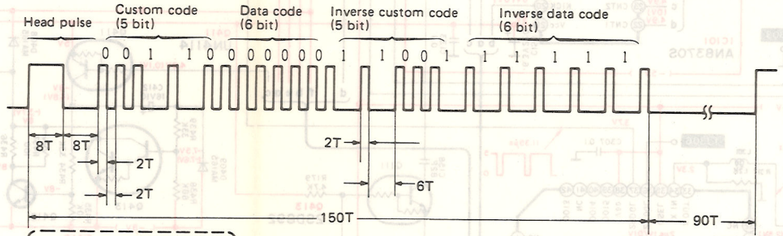

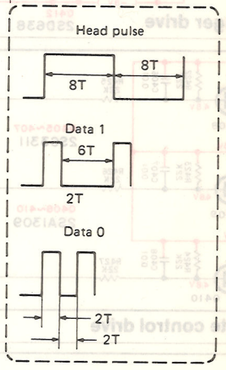

Key No.	Function	Data Code	Key No.	Function	Data Code
0	Stop	000000	20	Numeric 5	001010
2	Skip ⏮	010000	21	Numeric 6	101010
3	Skip ⏭	110000	22	Numeric 7	011010
4	Search ◀◀	001000	23	Numeric 8	111010
5	Search ▶▶	101000	24	Numeric 9	000110
6	Pause	011000	25	Numeric 0	100110
7	Repeat	111000	33	Asterisk ※	100001
10	Play	010100	36	Level Up ▲	001001
11	Clear	110100	37	Level Down ▼	101001
15	Music Scan	111100	40	Index	000101
16	Numeric 1	000010	42	Memory	010101
17	Numeric 2	100010	43	Elapsed/remain	110101
18	Numeric 3	010010	44	Track/total	001101
19	Numeric 4	110010			

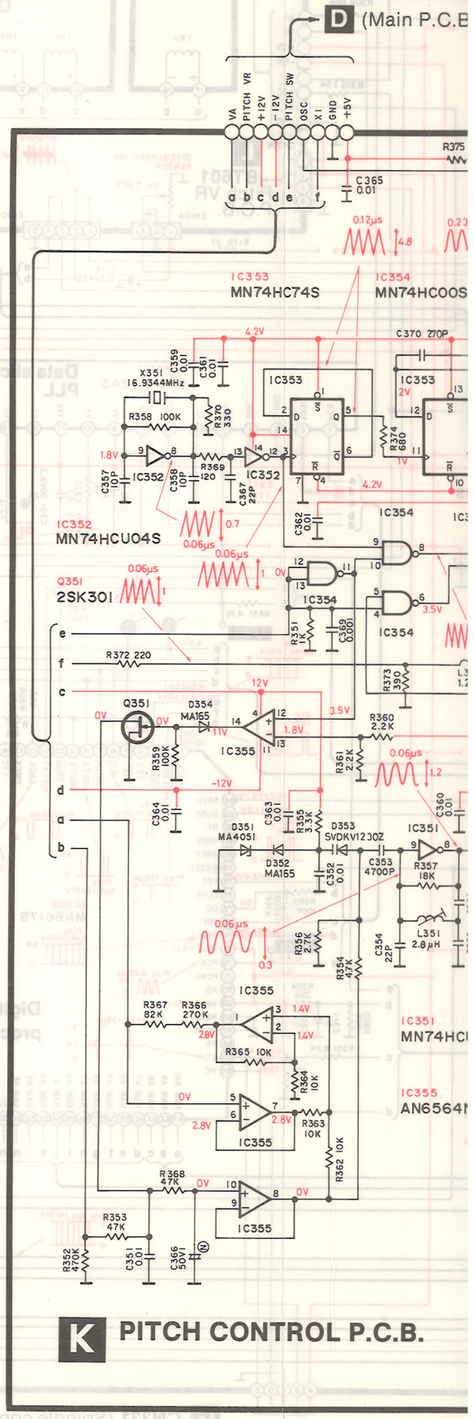

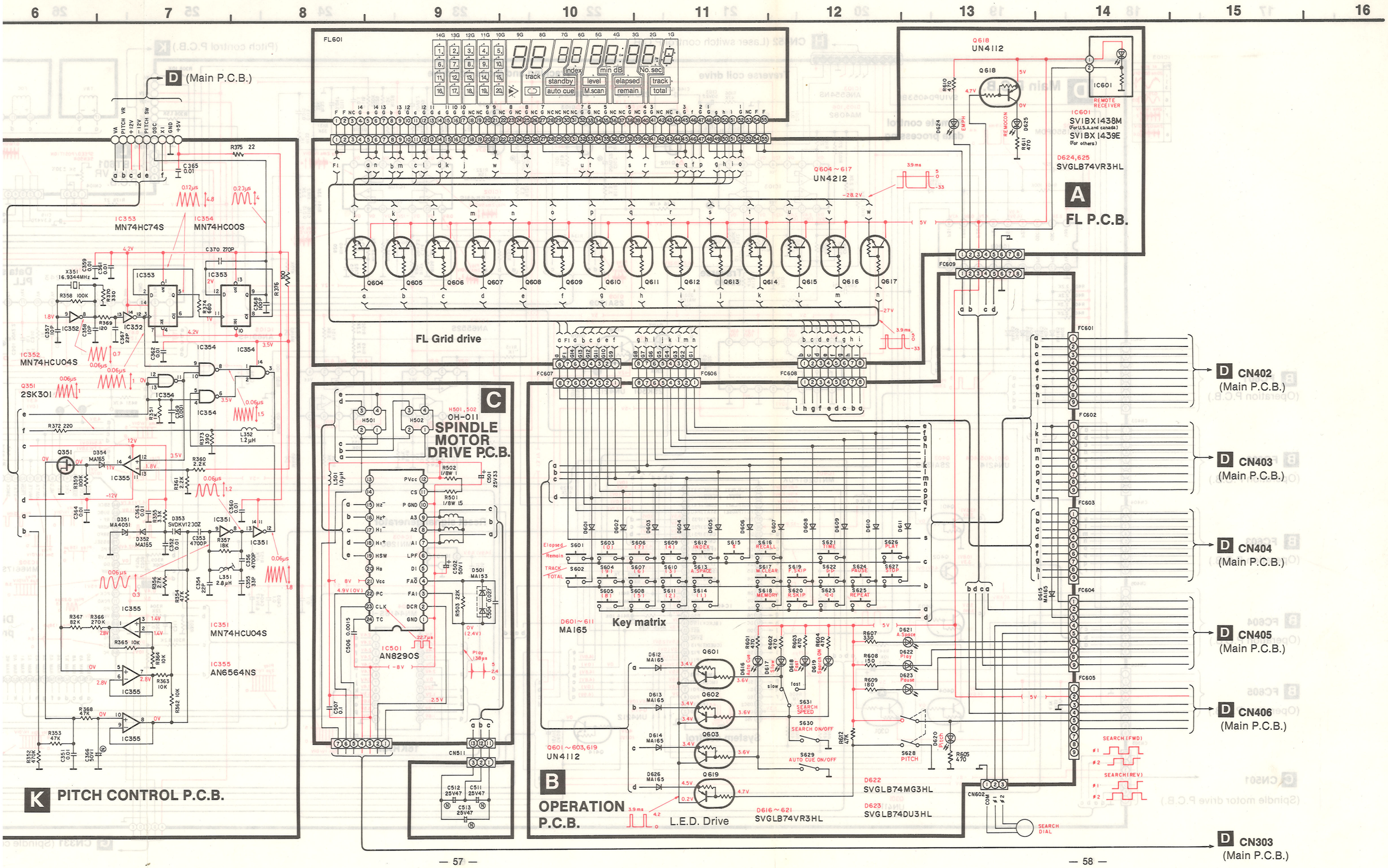

6
7
8
9
10
11
12
13
14
15
16
D (Main P.C.B.)
FL601
Q618
UN4112
IC601
SV1BX1438M
SV1BX1439E
D624,625
SVGLB74VR3HL
A
FL P.C.B.
Q604~617
UN4212
FL Grid drive
IC353
MN74HC74S
IC354
MN74HC00S
IC352
MN74HCU04S
Q351
2SK301
IC351
MN74HCU04S
IC355
AN6564NS
K
PITCH CONTROL P.C.B.
C
H501,502
OH-011
SPINDLE MOTOR DRIVE P.C.B.
IC501
AN8290S
D601~611
MA165
Key matrix
Q601~603,619
UN4112
B
OPERATION P.C.B.
L.E.D. Drive
D616~621
SVGLB74VR3HL
D622
SVGLB74MG3HL
D623
SVGLB74DU3HL
D CN402 (Main P.C.B.)
D CN403 (Main P.C.B.)
D CN404 (Main P.C.B.)
D CN405 (Main P.C.B.)
D CN406 (Main P.C.B.)
D CN303 (Main P.C.B.)

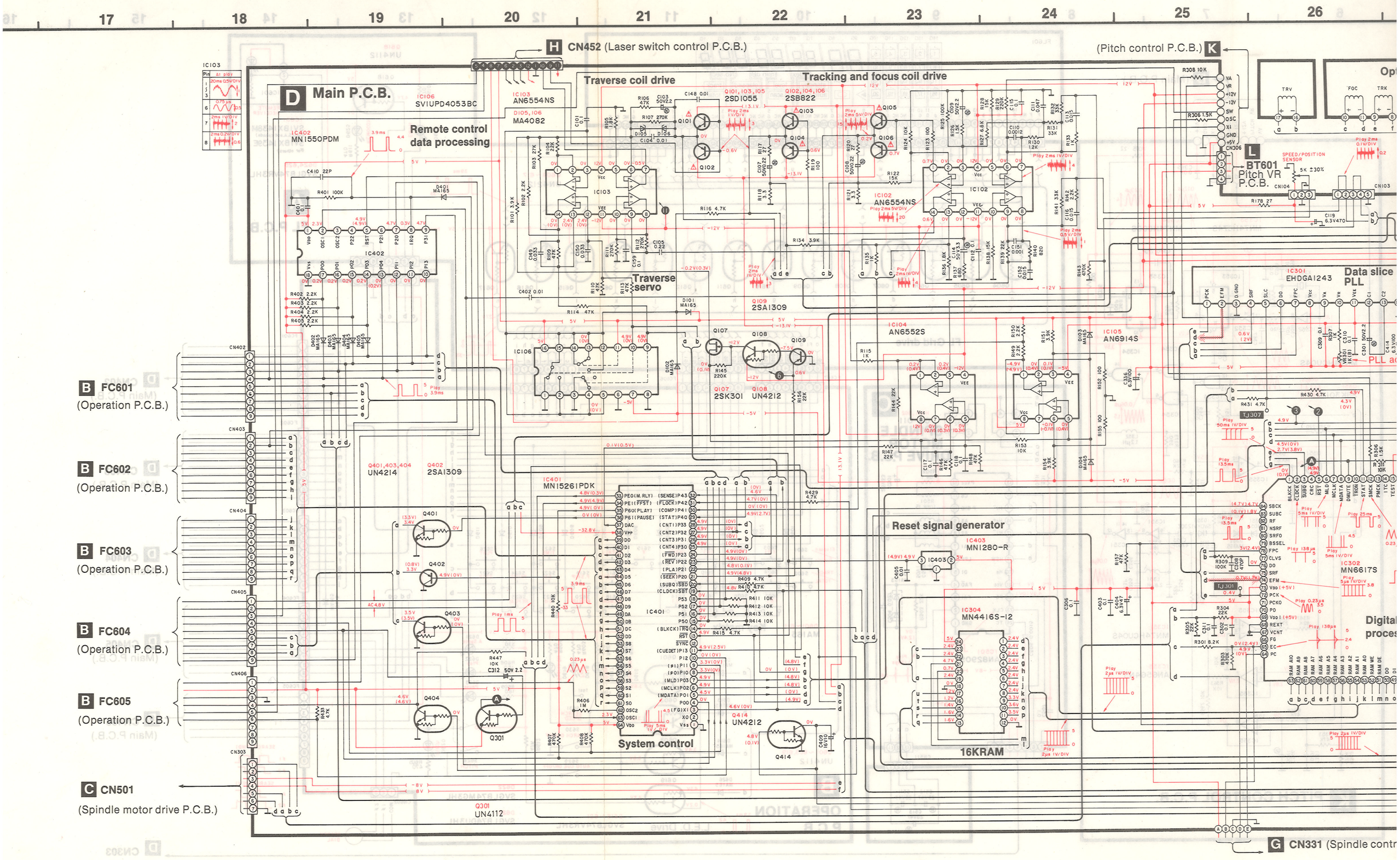

17
18
19
20
21
22
23
24
25
26
H CN452 (Laser switch control P.C.B.)
(Pitch control P.C.B.) K
D Main P.C.B.
Traverse coil drive
Tracking and focus coil drive
Remote control data processing
Traverse servo
L BT601 Pitch VR P.C.B.
Data slice PLL
B FC601 (Operation P.C.B.)
B FC602 (Operation P.C.B.)
B FC603 (Operation P.C.B.)
B FC604 (Operation P.C.B.)
B FC605 (Operation P.C.B.)
C CN501 (Spindle motor drive P.C.B.)
Reset signal generator
System control
16KRAM
G CN331 (Spindle contr

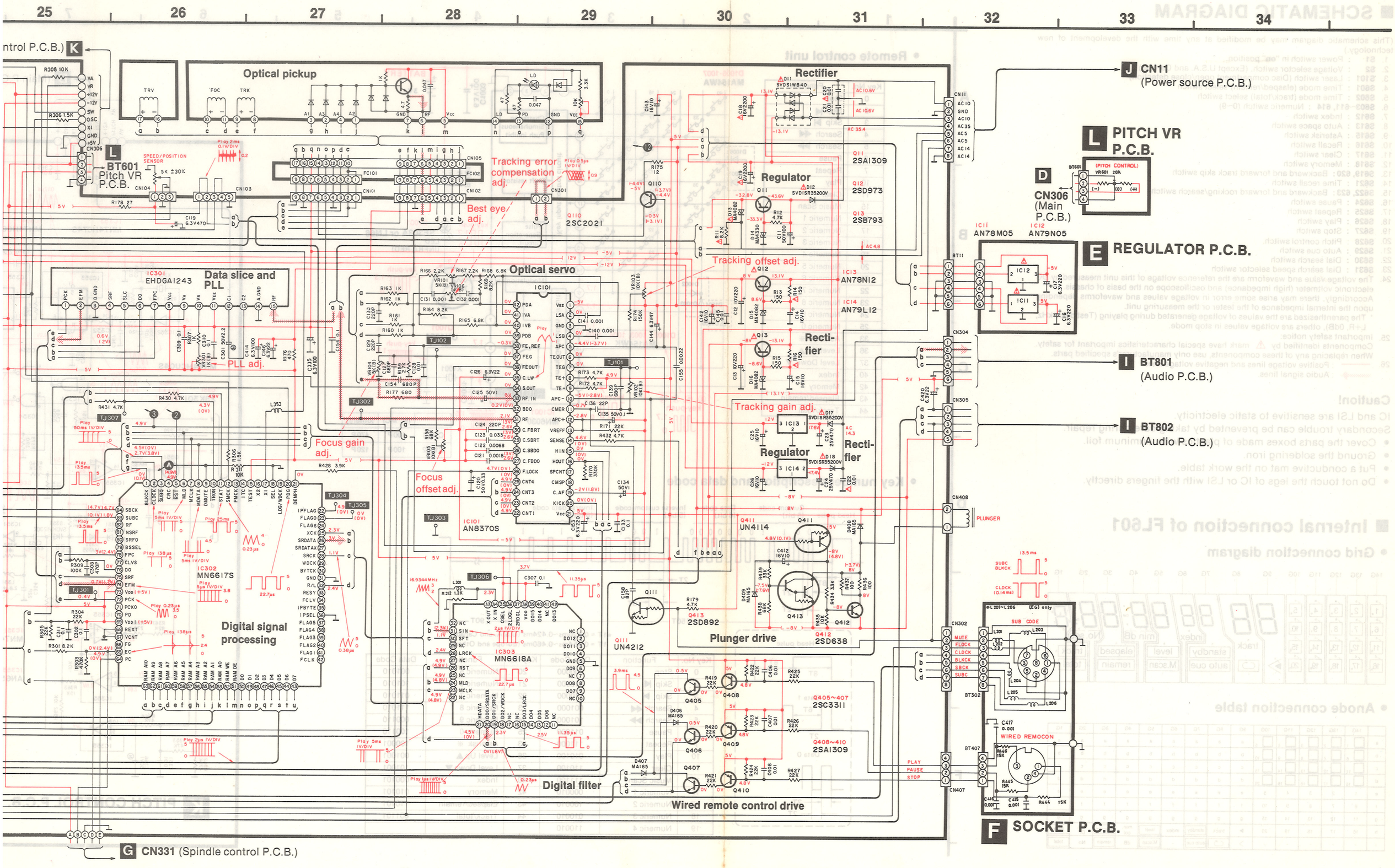

25
26
27
28
29
30
31
32
33
34
ntrol P.C.B.) K
Optical pickup
Rectifier
J CN11
(Power source P.C.B.)
L PITCH VR
P.C.B.
D
CN306
(Main
P.C.B.)
L
BT601
Pitch VR
P.C.B.
Tracking error
compensation
adj.
Best eye
adj.
Regulator
Q11 2SA1309
Q12 2SD973
Q13 2SB793
IC11 AN78M05
IC12 AN79N05
E REGULATOR P.C.B.
Tracking offset adj.
IC13 AN78N12
IC14 AN79L12
Data slice and
PLL
IC301
EHDGA1243
Optical servo
IC101
PLL adj.
Rectifier
I BT801
(Audio P.C.B.)
Tracking gain adj.
I BT802
(Audio P.C.B.)
Focus gain
adj.
Focus
offset adj.
Regulator
Rectifier
IC101
AN8370S
IC302
MN6617S
Digital signal
processing
IC303
MN6618A
Q111
UN4212
Q411
UN4114
Q413
2SD892
Q412
2SD638
Plunger drive
Q405~407
2SC3311
Q408~410
2SA1309
Digital filter
Wired remote control drive
PLUNGER
SUB CODE
WIRED REMOCON
F SOCKET P.C.B.
G CN331 (Spindle control P.C.B.)

G SPINDLE CONTROL P.C.B.

D (Main P.C.B.)

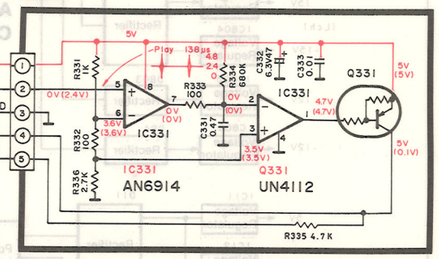

D (Main P.C.B.)

H LASER SWITCH CONTROL P.C.B.

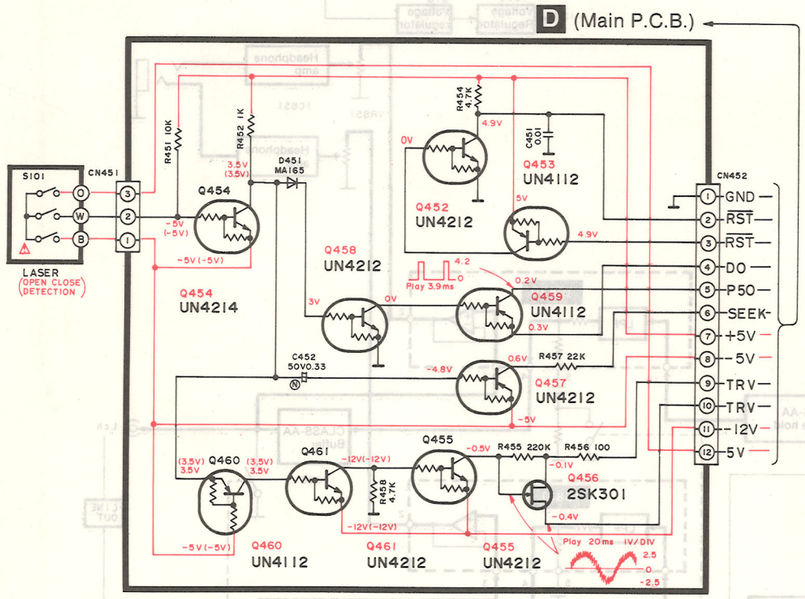

D CN11
(Main P.C.B.)

B CN304
(Main P.C.B.)

B CN305
(Main P.C.B.)

I AUDIO P.C.B.

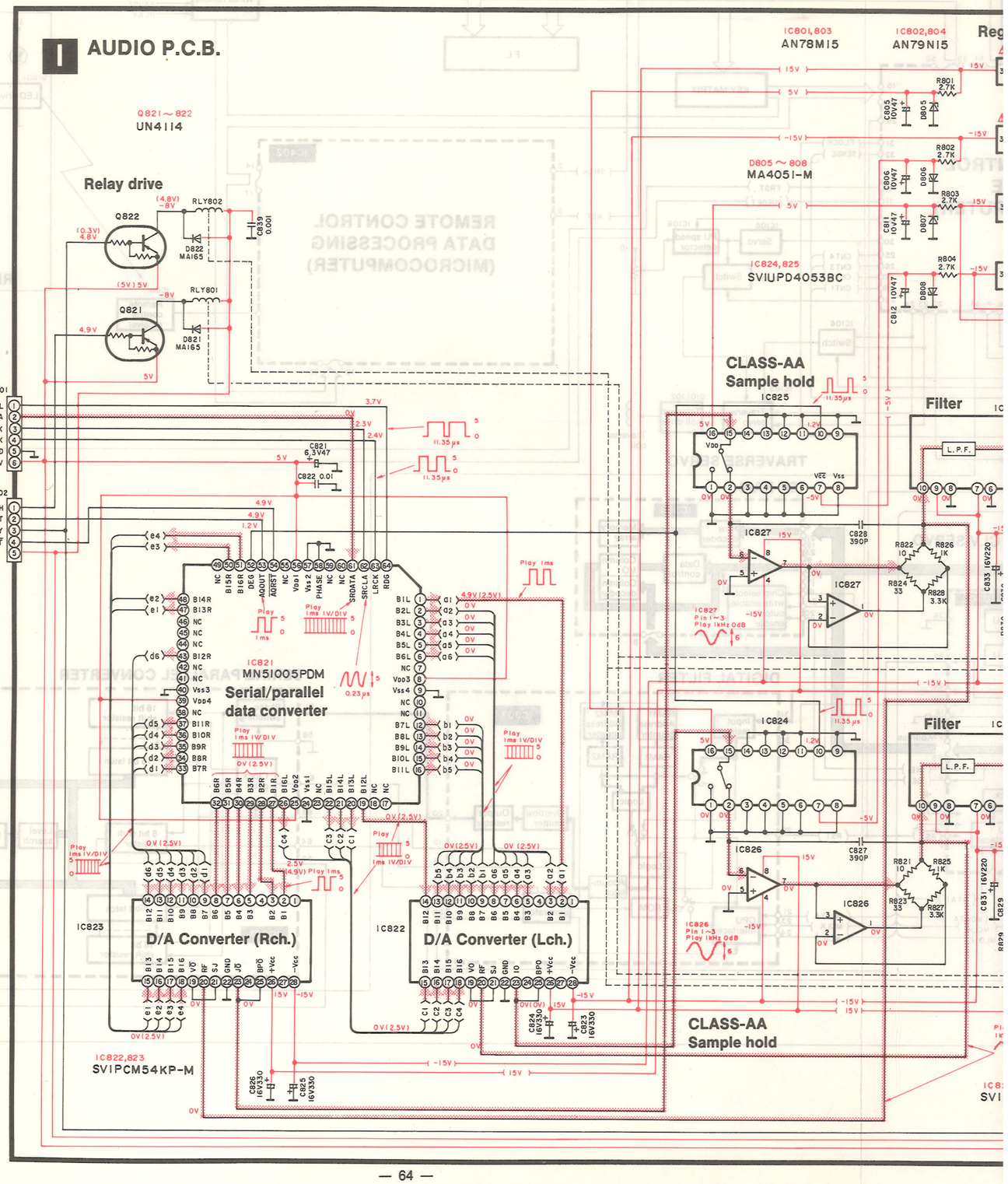

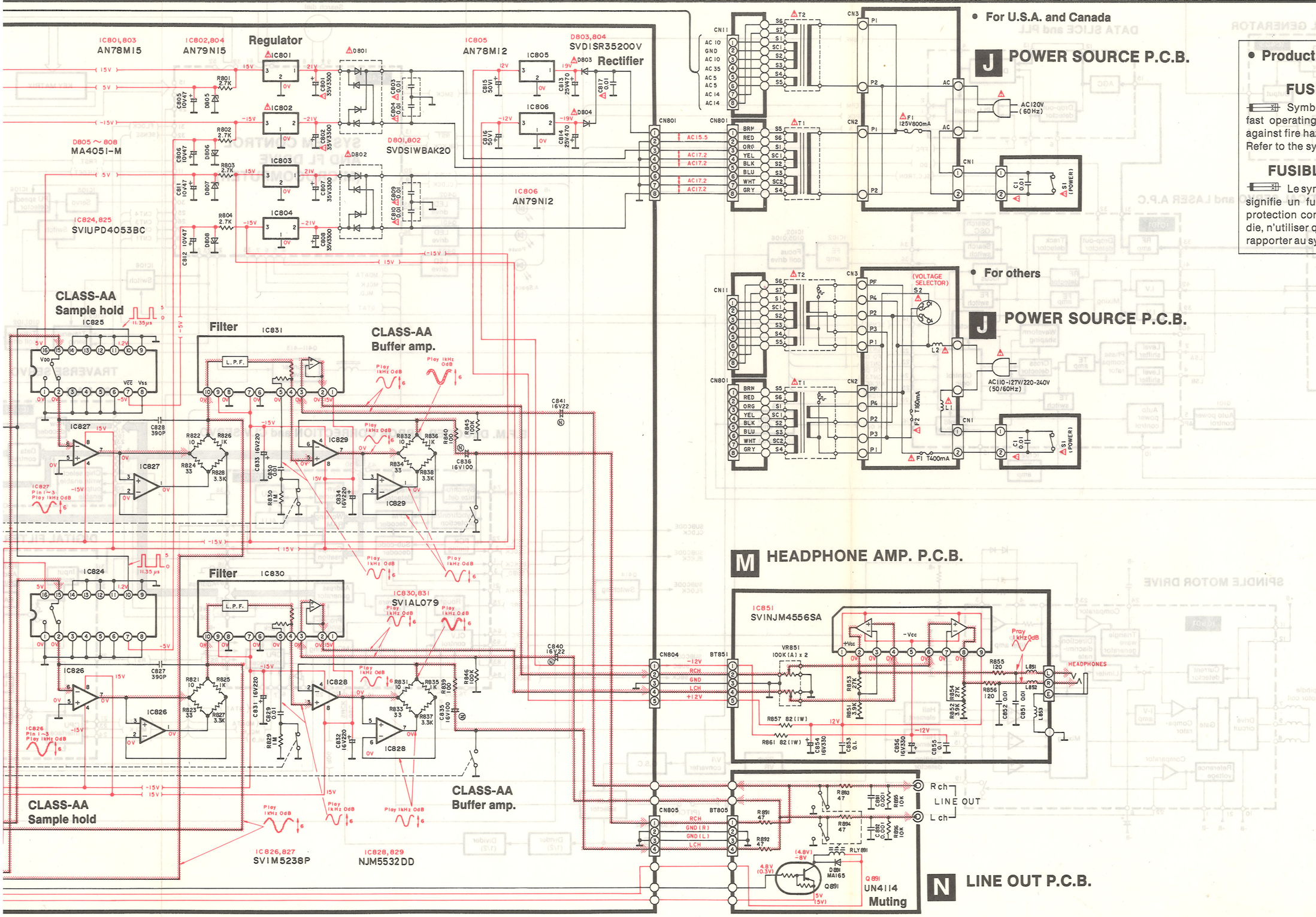

• Product for MC only

FUSE REPLACEMENT

Symbol located near the fuse indicates fast operating type. For continued protection against fire hazard, replace with same type fuse. Refer to the symbol for fuse rating.

FUSIBLE REMPLACEMENT

Le symbole qui se trouve près du fusible signifie un fusible à action rapide. Pour une protection continue contre les risques d'incendie, n'utiliser que des fusibles du même type. Se rapporter au symbole pour la valeur des fusibles.

■ BLOCK DIAGRAM

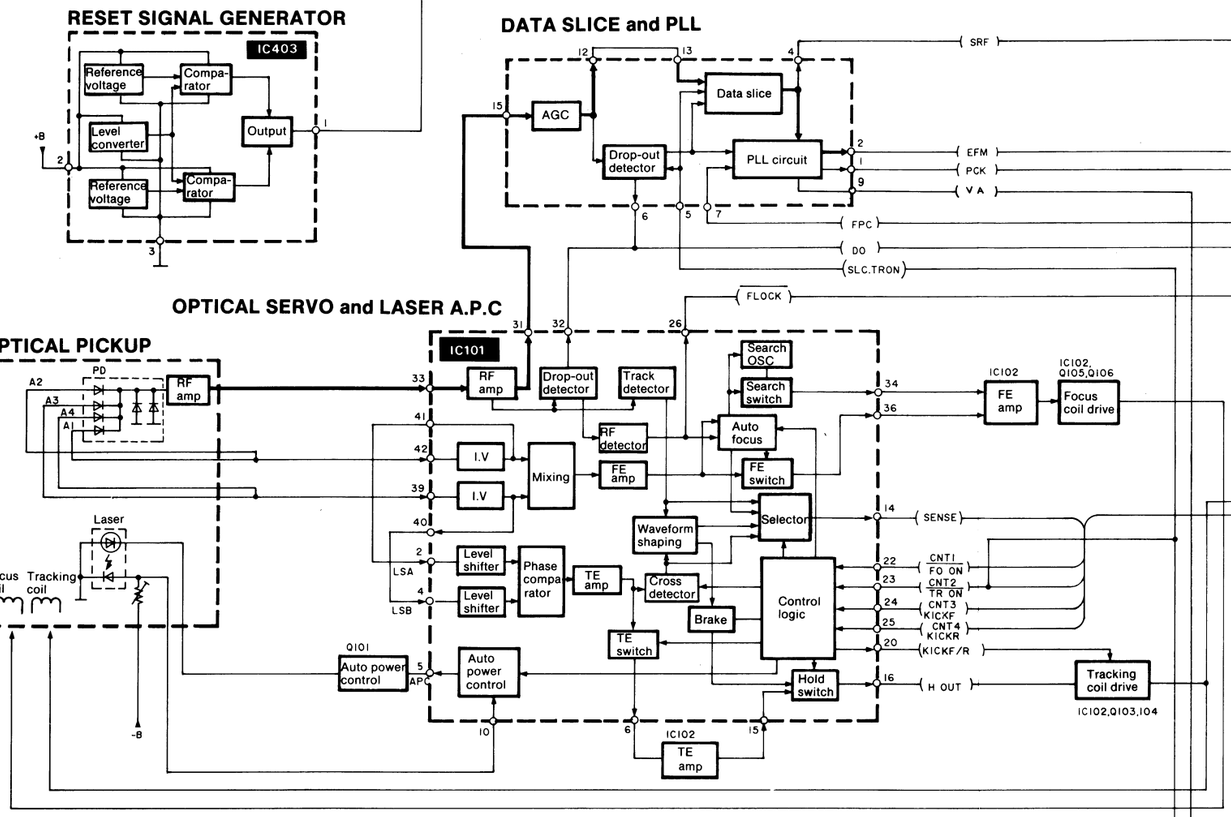

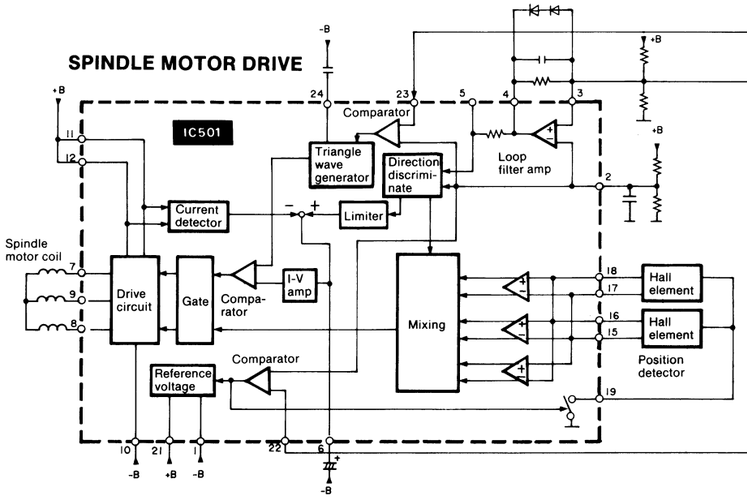

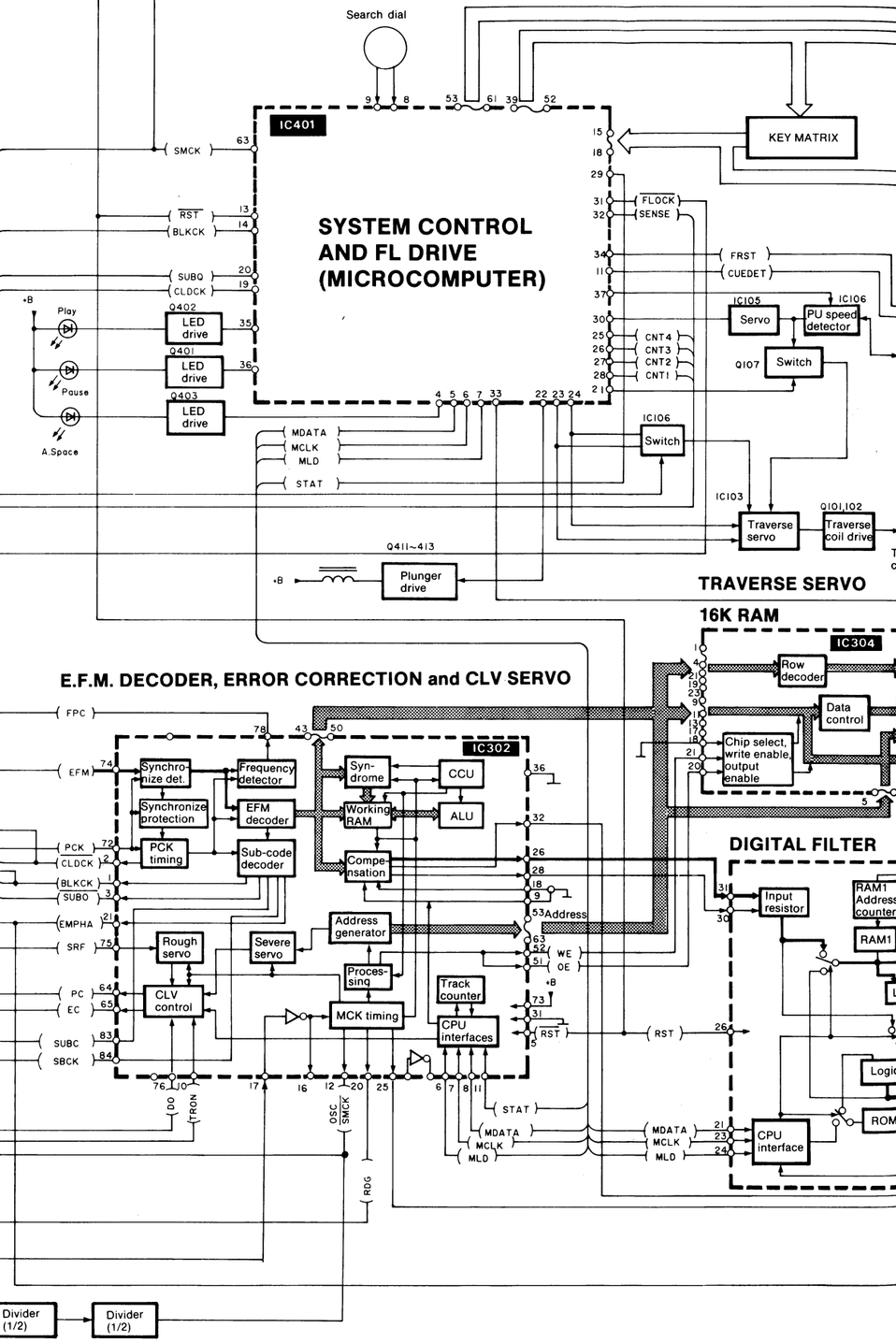

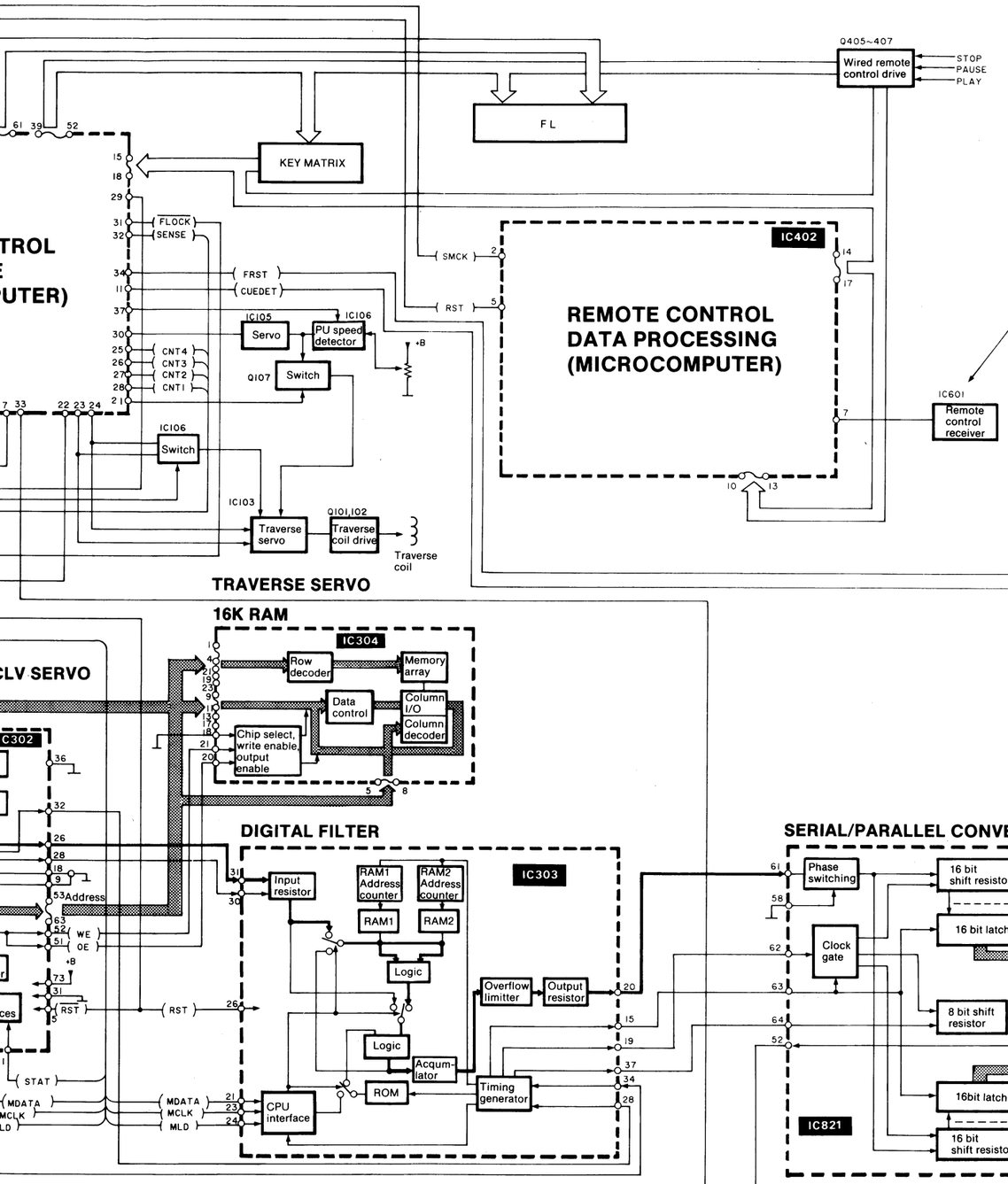

Printed in Japan
861009500 Ⓢ HS